M0117

OPERATOR & PARTS MANUAL

ECONO-FOLD PLANTER

WARNING

THIS MACHINE HAS BEEN DESIGNED AND BUILT WITH YOUR SAFETY IN MIND. ANY ALTERATION TO THE DESIGN OR CONSTRUCTION MAY CREATE SAFETY HAZARDS. DO NOT MAKE ANY ALTERATIONS OR CHANGES TO THE EQUIPMENT, BUT IF ANY ALTERATIONS OR CHANGES ARE MADE YOU MUST FOLLOW ALL APPROPRIATE SAFETY STANDARDS AND PRACTICES TO PROTECT YOU AND OTHERS NEAR THIS MACHINE FROM INJURY.

DANGER

THIS PLANTER IS DESIGNED TO BE DRIVEN BY GROUND TIRES ONLY. THE USE OF HYDRAULIC, ELECTRIC OR PTO DRIVES MAY CREATE SERIOUS SAFETY HAZARDS TO YOU AND THE PEOPLE NEAR BY. IF YOU INSTALL SUCH DRIVES YOU MUST FOLLOW ALL APPROPRIATE SAFETY STANDARDS AND PRACTICES TO PROTECT YOU AND OTHERS NEAR THIS PLANTER FROM INJURY.

PARTS LIST INDEX

Tongue Assembly 24
Frame Assembly 25
Drive Wheel Module 26
Lift Wheel Module 28
Transmission and Drive Line 30
Marker Assembly, 8R30 and Wide 32
Marker Assembly, 12R30 34
Marker Hub Assembly 36
Marker Cylinder 37
Lift Cylinder 38
Hydraulic System, 8R30 39
Hydraulic System, 8R Wide 40
Hydraulic System, 12R30 41
Sequencing Valve 42
Flow Control Valve 42
Decals, Reflectors and Tie Straps 43
Numerical Index 44

TONGUE ASSEMBLY

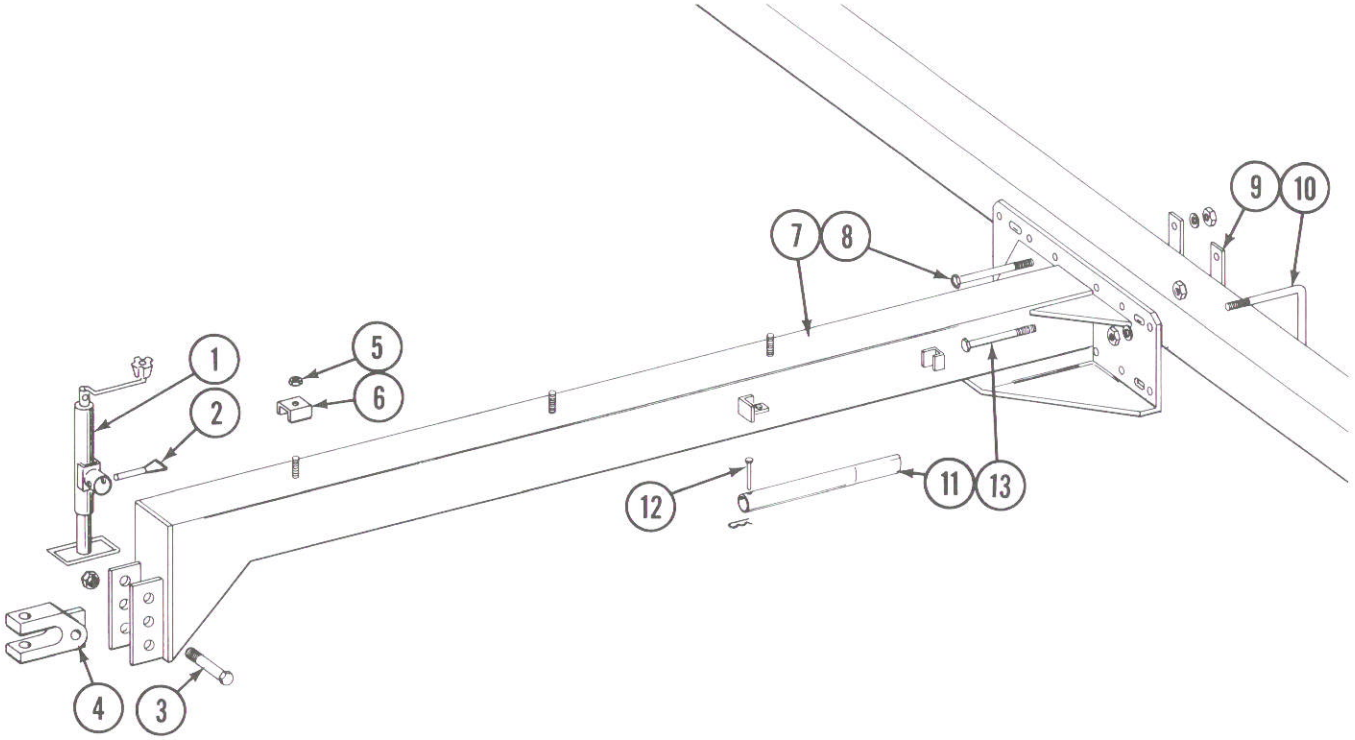

ITEM	PART NO.	DESCRIPTION
1.	4100-2	Jack
2.	R255	Repair Kit (Chain and pin)
3.	10169	HHCS, 1 1/4" - 7 x 6"
	10157	Lock Nut, 1 1/4" - 7
4.	B156	Clevis
5.	10111	Lock Nut, 1/2" - 13
6.	D740	Clamp
7.	A2163	Hitch
	A2251	Hitch, Extended, Optional, 8R Wide Models
8.	10059	HHCS, 3/4" - 10 x 9 1/2"
	10231	Lock Washer, 3/4"
	10105	Hex Nut, 3/4" - 10
9.	D2713	Bar
10.	D1748	U-Bolt, 7" x 7" x 3/4" - 10
	10231	Lock Washer, 3/4"
	10105	Hex Nut, 3/4" - 10
11.	D2751	Handle
12.	10549	Clevis Pin, 3/8" x 4"
	10670	Hairpin Clip
13.	10152	HHCS, 5/8" - 11 x 9"
	10107	Lock Nut, 5/8" - 11

FRAME ASSEMBLY

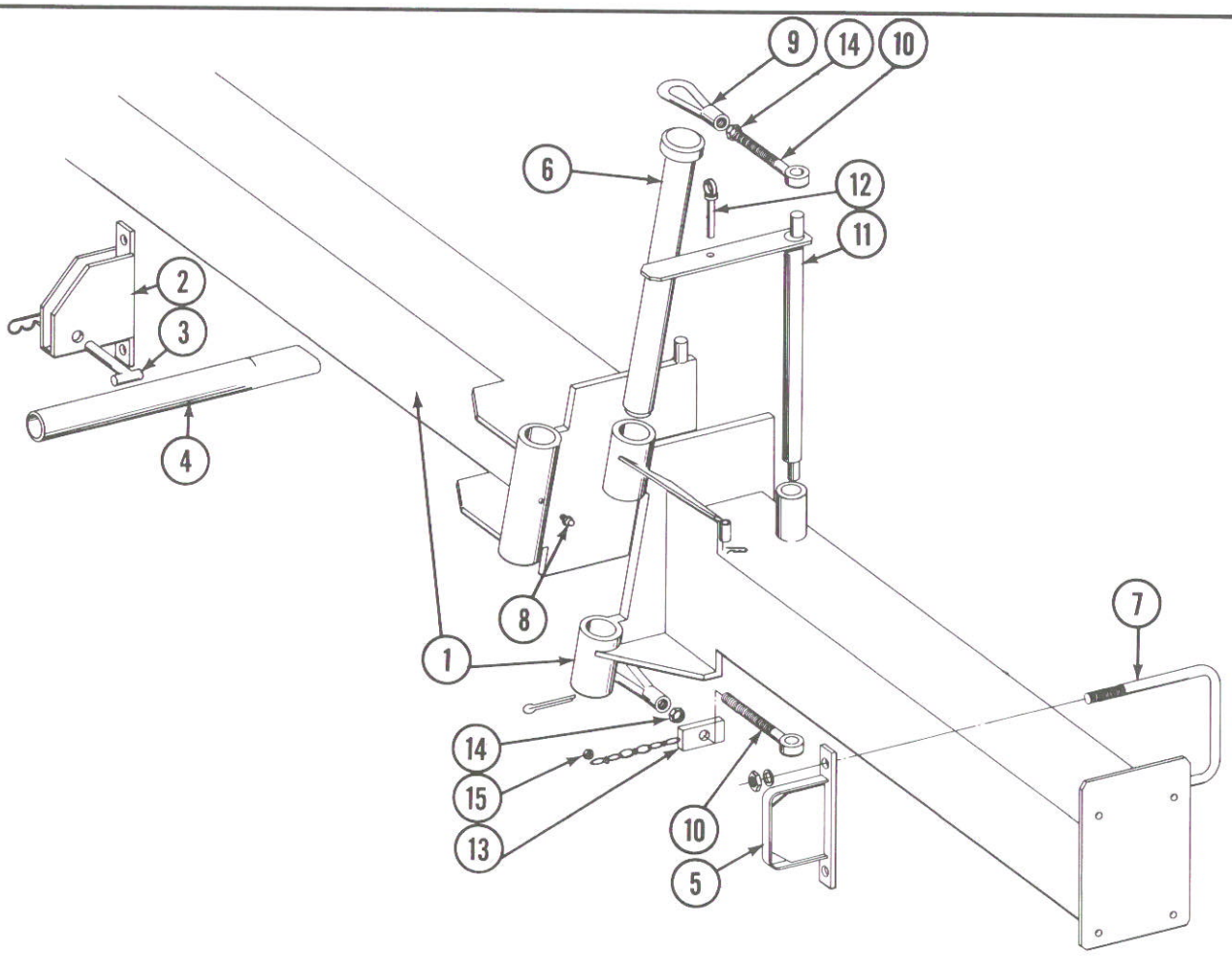

ITEM	PART NO.	DESCRIPTION
1.	A2214	Frame, 236 11/16", 8R30
	A2215	Frame, 289 15/16", 8R Wide
	A2198	Frame, 356 7/16", 12R30
2.	A2149	Latch Transport
3.	A2153	Pin, 3 3/4"
	10671	Hairpin Clip 3/16" x 3 1/4"
4.	D2751	Handle
5.	A2150	Latch, Transport
6.	A2174	Pin,
	10461	Cotter Pin, 3/8" x 3"
7.	D1114	U-Bolt, 7" x 7" x 5/8" - 11
	10230	Lock Washer, 5/8"
	10104	Hex Nut, 5/8" - 11
8.	10641	Fitting, Grease
9.	D2744	Eye Nut
10.	D2743	Eye Bolt
11.	A2222	Pin, Locking, R.H.
	A2221	Pin, Locking, L.H. (Shown)
12.	A2223	Pin
	10670	Hairpin Clip, No. 3
13.	A2224	Chain Weld
14.	10176	Jam Nut, 3/4" - 16 NF
15.	10109	Lock Nut, 5/16" - 18

DRIVE WHEEL MODULE

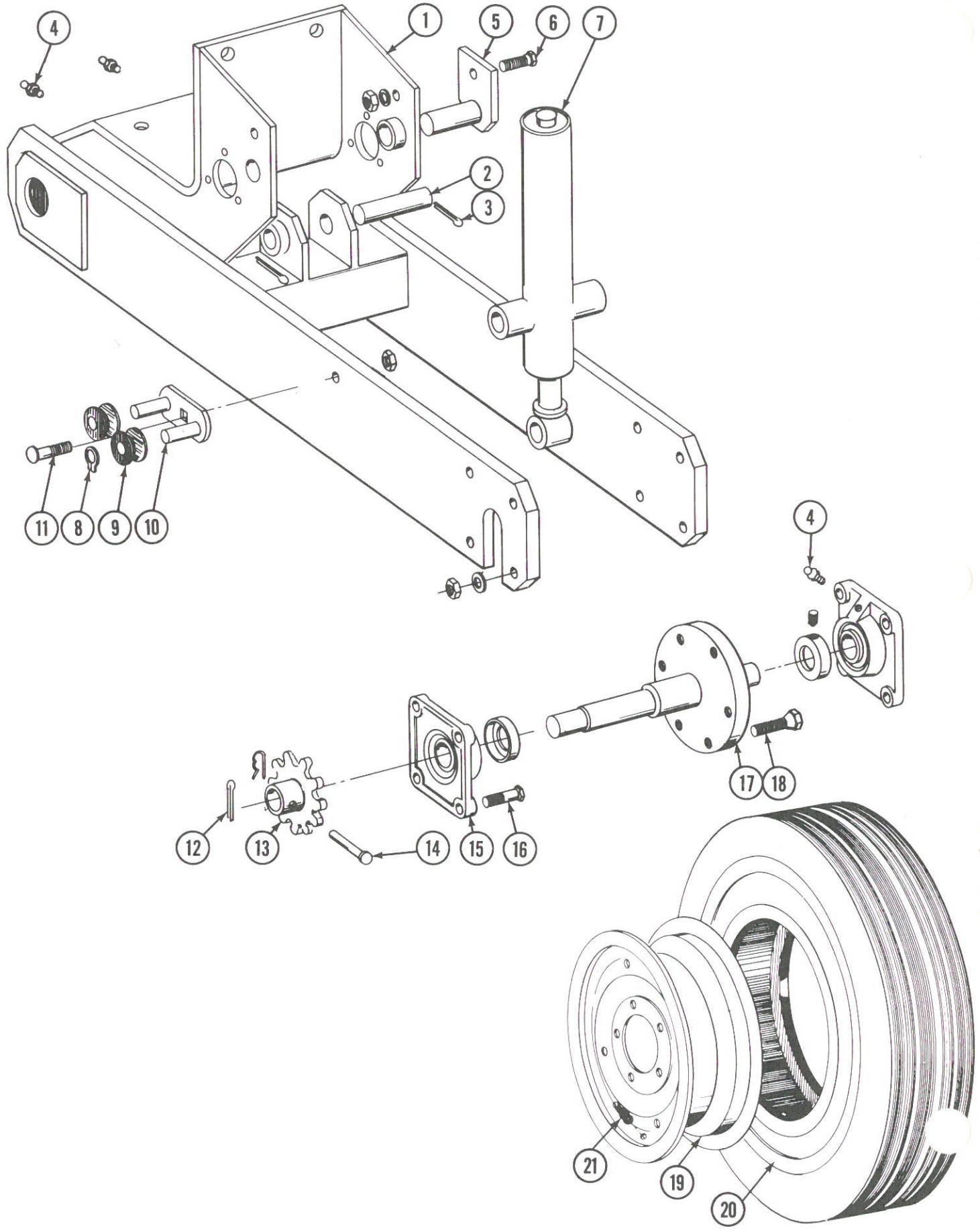

DRIVE WHEEL MODULE

ITEM	PART NO.	DESCRIPTION	
1.	A2211	Module and Bearing Plate Assembly	
	A2212	Module and Bearing Plate Assembly	(Shown)
2.	D826	Pin	
3.	10460	Cotter Pin, 1/4" x 2"	
4.	10641	Fitting, Grease	
5.	A2152	Pin, Cylinder	
6.	10017	HHCS, 1/2"-13 x 1 1/2"	
	10228	Lock Washer, 1/2"	
	10102	Hex Nut, 1/2"-13	
7.	A2169	Canister Assembly, Down Pressure	
8.	10435	Ring	
9.	D1067	Spool	
10.	A288	Bracket	
11.	10313	Carriage Bolt, 1/2"-13 x 1 1/2"	
	10088	Carriage Bolt, 1/2"-13 x 1 1/2", L.H. Thread	
	10102	Hex Nut, 1/2"-13	
	10086	Hex Nut, 1/2"-13 L.H. Thread	
12.	10460	Cotter Pin, 1/4" X 2"	
13.	2500-23	Sprocket, 12T	
14.	10566	Clevis Pin, 5/16" x 2 1/4"	
	10455	Cotter Pin, 1/16" x 1/2"	
15.	A450	Bearing w/Lock Collar, 1 1/2"	
	R266	Lock Collar	
16.	10016	HHCS, 1/2"-13 x 2"	
	10228	Lock Washer, 1/2"	
	10102	Hex Nut, 1/2"-13	
17.	A2156	Spindle	
18.	R270	Bolt, Lug	
19.	A2142	Rim, 20 x 5.50F	
20.	D2648	Tire, 7:50 x 20", 6 Ply Tubeless	
21.	D1165	Valve Stem	

A.	A289	Idler Assembly (Items 8 thru 10))
B.	A2207	Tire and Wheel Assembly (Items 19 thru 21)

LIFT WHEEL MODULE

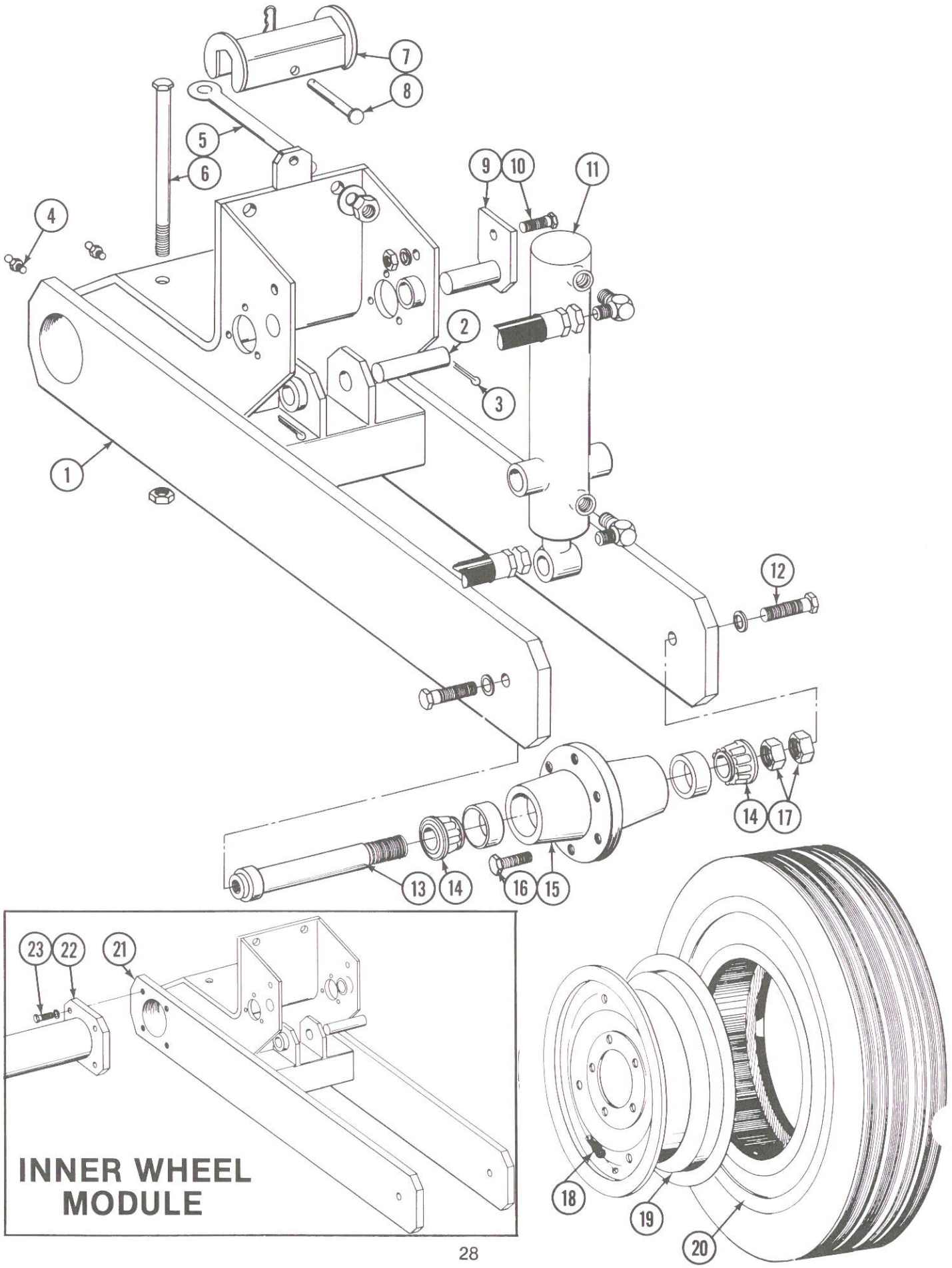

LIFT WHEEL MODULE

ITEM	PART NO.	DESCRIPTION
1.	A2182	Module, Outer Lift Wheel
2.	D826	Pin
3.	10460	Cotter Pin, 1/4" x 2"
4.	10641	Fitting, Grease
5.	D830	Bolt, Eye, 3/4" - 10 x 9"
	10231	Lock Washer, 3/4"
	10105	Hex Nut, 3/4" - 10
6.	10030	HHCS, 3/4" - 10 x 9"
	10112	Lock Nut, 3/4" - 10
7.	A2201	Lock-up
8.	10561	Clevis Pin, 1/2" x 3"
	10670	Hairpin Clip, No. 3
9.	A2152	Pin, Cylinder
10.	10017	HHCS, 1/2" - 13 x 1 1/2"
	10228	Lock Washer, 1/2"
	10102	Hex Nut, 1/2" - 13
11.	A921	Cylinder, 3" x 10"
12.	10026	HHCS, 3/4" - 10 x 2"
	10231	Lock Washer, 3/4"
13.	A2155	Spindle
14.	A895	Bearing Cone
15.	A2148	Hub w/Cups, 6 Bolt
	R434	Cup
16.	R270	Lug Bolt, 9/16" - 18
17.	10087	Jam Nut, 1 1/2" - 12
18.	D1165	Valve Stem
19.	A2142	Rim, 20 x 5.50F
20.	D2648	Tire, 7:50 x 20", 6 Ply Tubeless
21.	A2185	Module, Inner Lift Wheel, L.H.
	A2186	Module, Inner Lift Wheel, R.H. (Shown)
22.	A2187	Tube, Torque, 47", 8R30
	A2188	Tube, Torque, 64", 8R Wide
	A2189	Tube, Torque, 107", 12R30
23.	10007	HHCS, 5/8" - 11 x 1 1/2"
	10230	Lock Washer, 5/8"
A.	A2207	Tire and Wheel Assembly (Items 18 thru 20)

TRANSMISSION AND DRIVE LINE

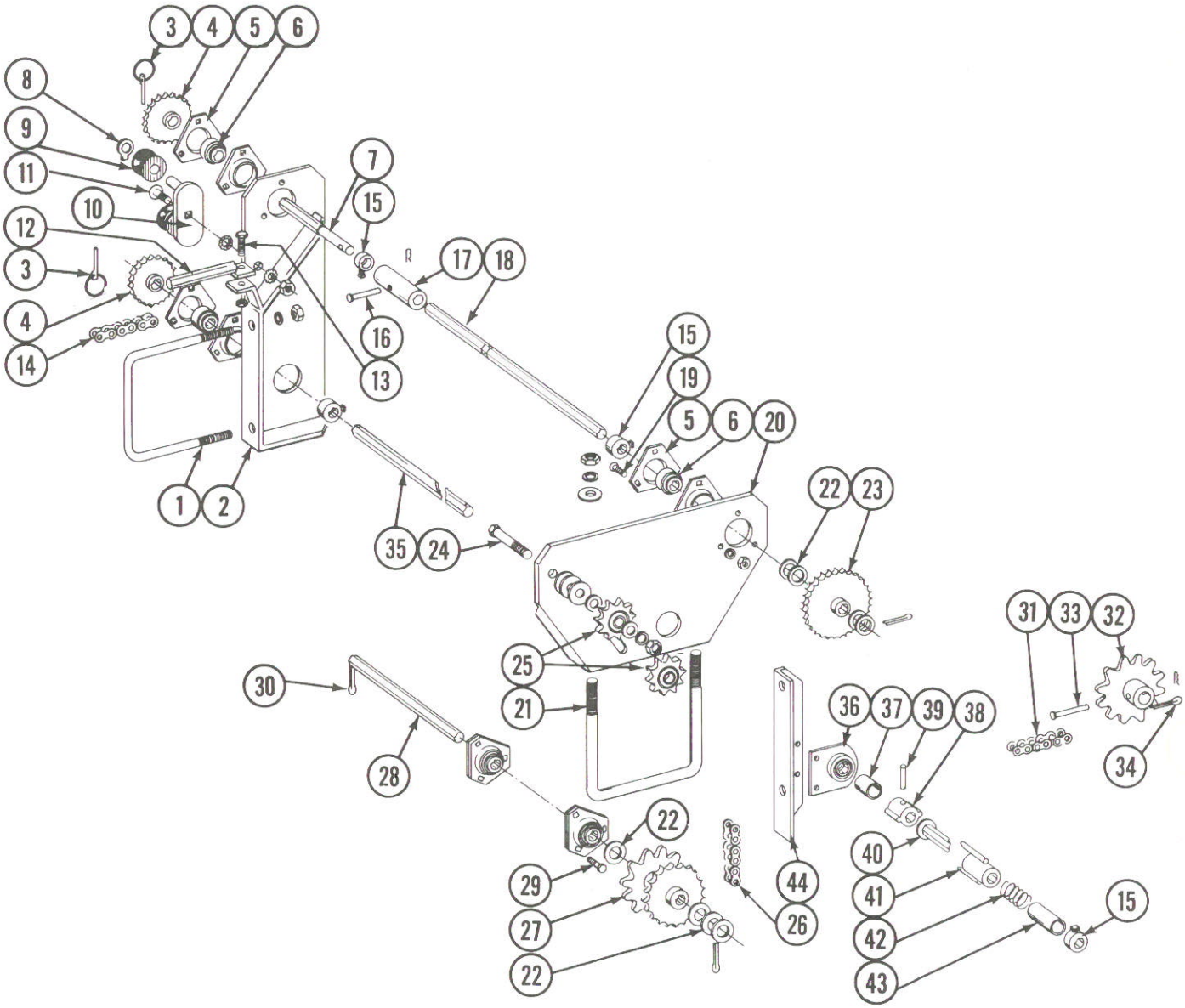

ITEM	PART NO.	DESCRIPTION
1.	D1114	U-Bolt, 7" x 7" x 5/8"-11
	10230	Lock Washer, 5/8"
	10104	Hex Nut, 5/8"-11
2.	A1729	Transmission Side Plate (Shown)
	A2202	Transmission Side Plate
3.	D2558	Pin, Lynch, 1/4"
4.	2500-1	Sprocket, 14T
	2500-2	Sprocket, 22/26T
	2500-3	Sprocket, 16/30T
	2500-6	Sprocket, 18/28T
5.	3400-1	Flangette
6.	2100-3	Bearing, 7/8 Hex Bore
7.	D2543	Shaft
8.	10435	Ring
9.	D1067	Spool
10.	A288	Bracket
11.	10313	Carriage Bolt, 1/2"-13 x 1 1/2"
	10527	Lock Washer, Internal-External, 1/2"
	10102	Hex Nut, 1/2"-13
A.	A289	Idler Assembly (Items 8 thru 10)

TRANSMISSION AND DRIVE LINE

ITEM	PART NO.	DESCRIPTION
12.	A1786	Rod, Sprocket Storage
13.	10019	HHCS, 5/16"-18 x 1"
	10109	Hex Lock Nut, 5/16"-18
14.	3300-40	Chain, No. 2040, 40 Pitch Including Connector Link
	R194	Connector Link, No. 2040
15.	A271	Lock Collar
16.	10558	Clevis Pin, 5/16" x 1 3/4"
	10456	Cotter Pin, 1/8" x 3/4"
17.	D2567	Coupler
18.	D2548-28.5	Drive Shaft, 7/8 Hex, R.H. and L.H., 8R30
	D2548-35	Drive Shaft, 7/8 Hex, R.H. and L.H., 8R Wide
	D2548-58.5	Drive Shaft, 7/8 Hex, R.H. and L.H. 12R30 (Where Applicable)
	D914-46	Drive Shaft, 7/8 Hex, R.H. and L.H., 12R30 (Where Applicable)
19.	10303	Carriage Bolt, 5/16"-18 x 1"
	10232	Lock Washer, 5/16"
	10106	Hex Nut, 5/16"-18
20.	A2172	Plate, Bearing Support, R.H.
	A2173	Plate, Bearing Support, L.H.
21.	D1114	U-Bolt, 7" x 7" x 5/8"-11
	10217	Flat Washer, 5/8" USS
	10230	Lock Washer, 5/8"
	10104	Hex Nut, 5/8"-11
22.	10233	Machinery Bushing (As Required)
23.	2500-14	Sprocket, 24T
24.	10009	HHCS, 5/8"-11 x 2 1/2"
	10205	Washer, 5/8" SAE
	10107	Lock Nut, 5/8"-11
25.	A268	Sprocket
26.	3300-76	Chain, No. 2040, 76 Pitch Including Connector Link
	R194	Connector Link, No. 2040
27.	2500-24	Sprocket, 30/12T
28.	D2707	Shaft, 7/8" x 15 1/2"
29.	10019	HHCS, 5/16"-18 x 1"
	10232	Lock Washer, 5/16"
30.	10460	Cotter Pin, 1/4" x 2"
31.	3200-80	Chain, No. 2050, 80 Pitch Including Connector Link
	R195	Connector Link, No. 2040
32.	2500-23	Sprocket, 12T
33.	10566	Clevis Pin, 5/16" x 2 1/4"
	10455	Cotter Pin, 1/16" x 1/2"
34.	10460	Cotter Pin, 1/4" x 2"
35.	D2753	Drill Shaft, Wing, 7/8 Hex, 51" R.H. and L.H., 8R30
	D2754	Drill Shaft, Wing, 7/8 Hex, 64 1/2", R.H. and L.H., 8R Wide
	D2720	Drill Shaft, Wing, 7/8 Hex, 81", R.H. and L.H., 12R30
36.	A2180	Bearing, 7/8" Hex Hanger, L.H. Side
	A1720	Bearing and Sprocket, 7/8" Hex Hanger, R.H. Side
37.	D1199-3	Spacer, 5/8", 8R30 and 12R30
	D1199-5	Spacer, 5", 8R38
	D1199-6	Spacer, 1 1/4", 8R38 and 8R36
38.	A2171	Coupler
39.	10602	Pin, Spring, 1/4" x 1 1/2"
40.	A2192	Drill Shaft, Main Frame, 7/8" Hex, 60", R.H., 8R30
	A2193	Drill Shaft, Main Frame, 7/8 Hex, 49", L.H., 8R30
	A2194	Drill Shaft, Main Frame, 7/8 Hex, 73", R.H., 8R Wide
	A2195	Drill Shaft, Main Frame, 7/8 Hex, 63", L.H., 8R Wide
	A2190	Drill Shaft, Main Frame, 7/8 Hex, 90", R.H., 12R30
	A2191	Drill Shaft, Main Frame, 7/8 Hex, 79", L.H., 12R30
41.	A2170	Coupler
42.	D2599	Spring
43.	D1199-7	Spacer, 5 1/2"
44.	D2298	Support, Special (L.H. Wing Only)

MARKER ASSEMBLY, 8R30 AND WIDE

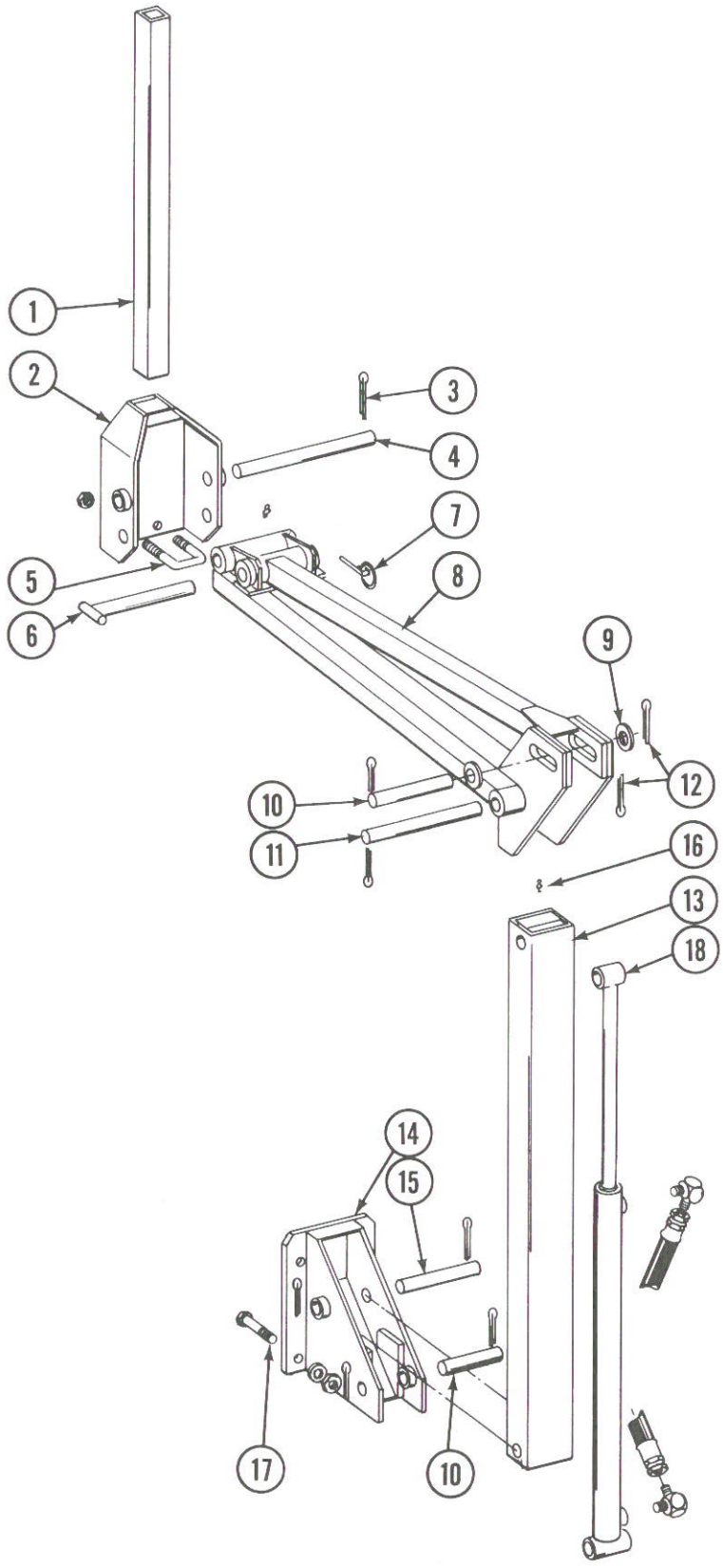

MARKER ASSEMBLY, 8R30 AND WIDE

ITEM	PART NO.	DESCRIPTION
1.	D453-2	Tube, Extension, 40", 8R30
	D453-4	Tube, Extension, 60", 8R Wide
2.	A2205	Marker Weld
3.	10463	Cotter Pin, 1/4" x 1 1/2"
4.	D2697	Pin
5.	D2721	U-Bolt, 2" x 3" x 1/2"-13
	10111	Lock Nut, 1/2"-13
6.	A2204	Pin, Tee
7.	D2558	Pin, Lynch
8.	A2199	Marker Weld, 8R30
	A2200	Marker Weld, 8R Wide
9.	10226	Flat Washer, 1 1/2"
10.	D1701	Pin
11.	D1702	Pin
12.	10460	Cotter Pin, 1/4" x 2"
13.	A2158	Marker Link
14.	A827	Bracket
15.	D653	Pin
16.	10641	Fitting, Grease
17.	10039	HHCS, 1/2"-13 x 1 3/4"
	10228	Lock Washer, 1/2"
	10102	Hex Nut, 1/2"-13
18.	A2151	Cylinder, 2" x 20"

MARKER ASSEMBLY, 12R30

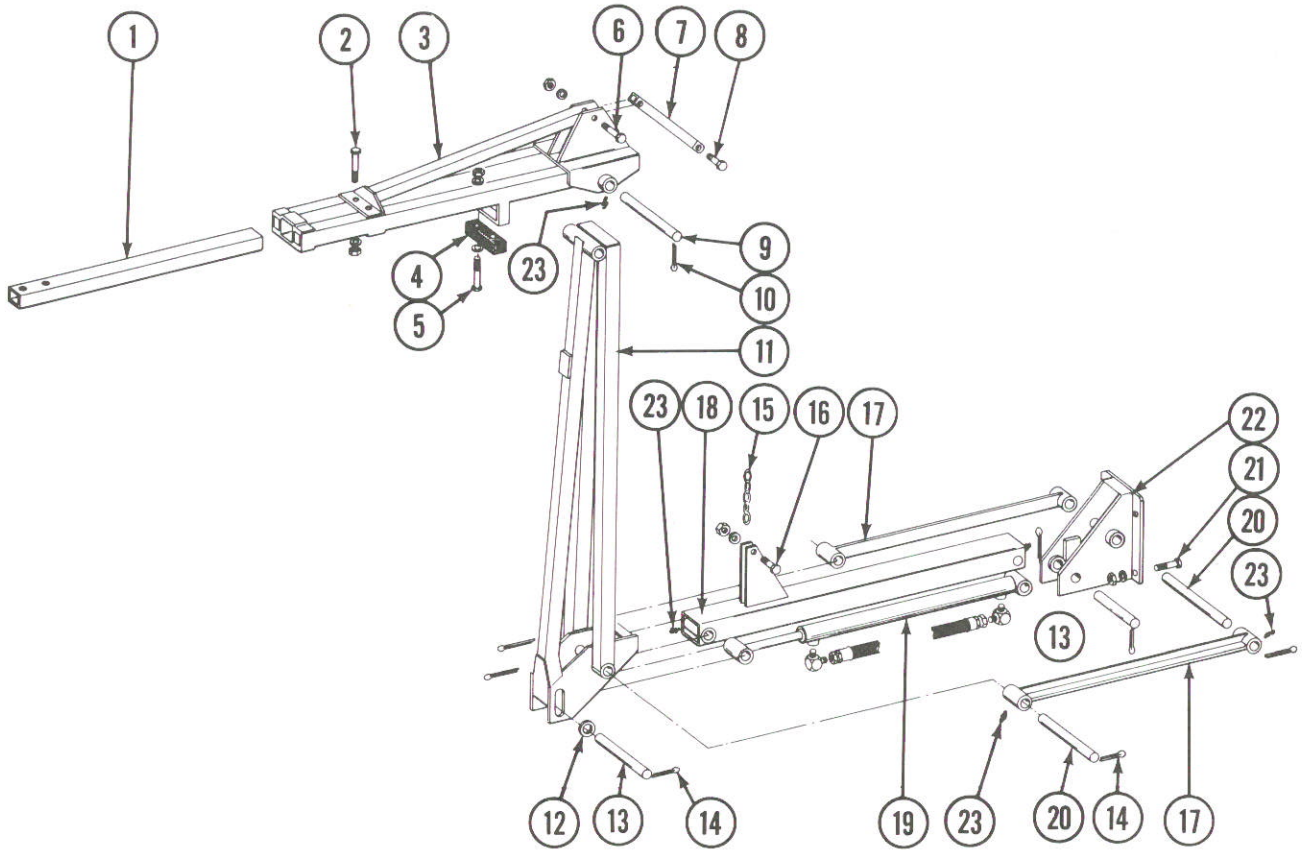

MARKER ASSEMBLY, 12R30

ITEM	PART NO.	DESCRIPTION
1.	D453-2	Tube, Extension, 40"
2.	10033	HHCS, 1/2"-13 x 3 1/2"
	10228	Lock Washer, 1/2"
	10102	Hex Nut, 1/2"-13
3.	A2166	Marker Weld
4.	D2698	Stop, Rubber
5.	10047	HHCS, 3/8"-16 x 1 3/4"
	10210	Flat Washer, 3/8" USS
	10229	Lock Washer, 3/8"
	10101	Hex Nut, 3/8"-16
6.	10038	HHCS, 1/2"-13 x 3"
	10111	Lock Nut, 1/2"-13
7.	A2145	Arm Weld, Linkage
8.	10016	HHCS, 1/2"-13 x 2"
	10111	Lock Nut, 1/2"-13
9.	D2697	Pin
10.	10463	Cotter Pin, 1/4" x 1 1/2"
11.	A2165	Marker Weld
12.	10226	Flat Washer, 1 1/4"
13.	D1701	Pin
14.	10460	Cotter Pin, 1/4" x 2"
15.	3302-4	Chain
16.	10039	HHCS, 1/2"-13 x 1 3/4"
	10111	Lock Nut, 1/2"-13
17.	A2162	Bar
18.	A2154	Link
19.	A2151	Cylinder, 2" x 20"
20.	D2681	Pin
21.	10039	HHCS, 1/2"-13 x 1 3/4"
	10228	Lock Washer, 1/2"
	10102	Hex Nut, 1/2"-13
22.	A827	Bracket
23.	10641	Fitting, Grease

MARKER HUB ASSEMBLY

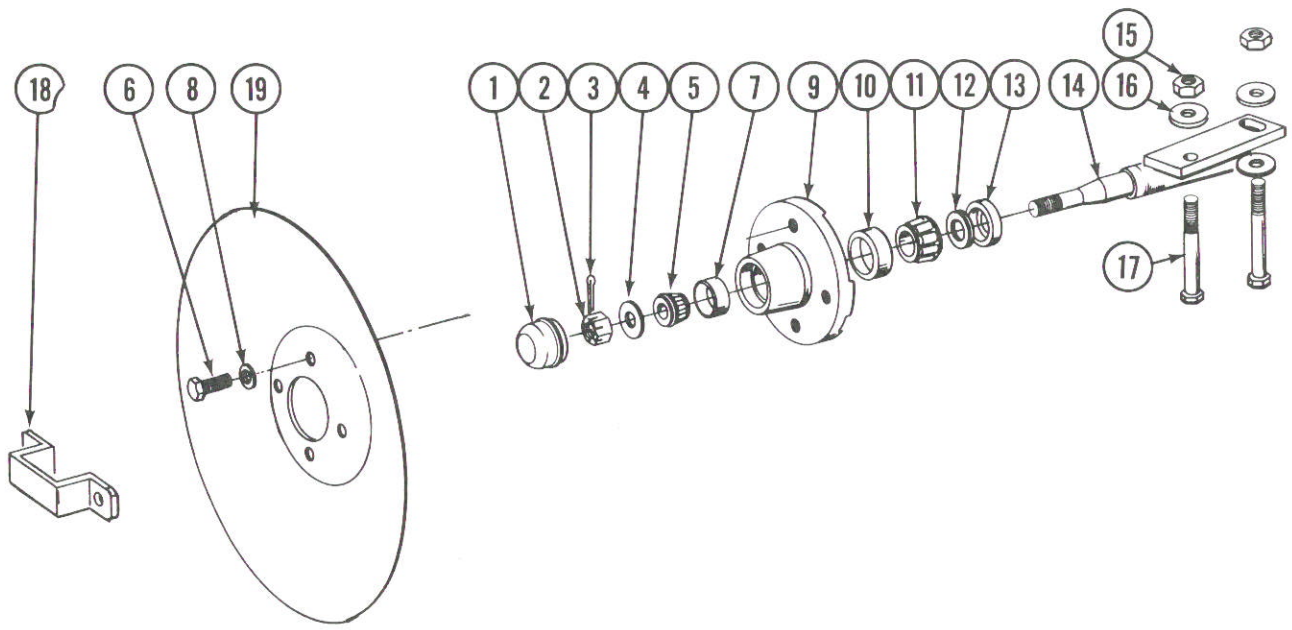

ITEM	PART NO.	DESCRIPTION
1.	D840	Hub Cap
2.	10725	Hex Nut, Slotted, 5/8" - 18
3.	10470	Cotter Pin, 5/32" x 1"
4.	10724	Washer, 5/8"
5.	A257	Bearing, Outer
6.	10722	HHCS, 1/2" - 20 x 1"
7.	R151	Cup, Outer
8.	10228	Lock Washer, 1/2"
9.	A167	Hub w/Cups
10.	R150	Cup, Inner
11.	A245	Bearing Inner
12.	A899	Seal, Rubber
13.	A243	Seal, Grease
14.	A1677	Spindle Weld, L.H., Less Hardware (Shown)
	A1676	Spindle Weld, R.H., Less Hardware
15.	10102	Hex Nut, 1/2" - 13
16.	10168	Machinery Bushing, 1/2" x 7 Ga.
17.	10033	HHCS, 1/2" - 13 x 3 1/2"
18.	D2597	Retainer
19.	D746	Disc, 16"
A.	A1679	Hub and Spindle Assembly L.H. (Items 1-14)
	A1678	Hub and Spindle Assembly R.H. (Items 1-14)

MARKER CYLINDER

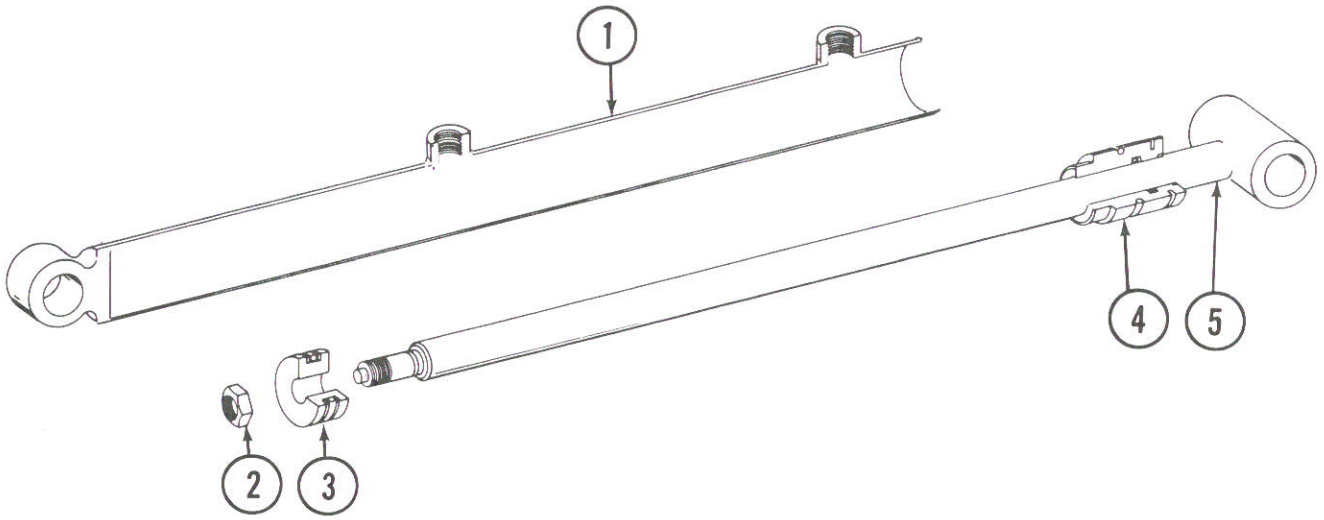

ITEM	PART NO.	DESCRIPTION
1.	R601	Tube Assembly
2.	R366	Nut, 3/4 - 16 NF
3.	R365	Piston
4.	R552	Head Gland
5.	R551	Shaft Assembly
*A.	A2151	Cylinder Assembly, 2" x 20" w/Extended Case
	R368	Seal Kit Includes (1) O-Ring, 614 I.D. x .754 O.D. (1) O-Ring, 1.109 I.D. x 1.387 O.D. (2) O-Ring, 1.600 I.D. x 2.200 O.D. (1) Back Up Washer, 1 1/8" I.D. x 1 3/8" O.D. (1) Rod Wiper 2" I.D. (1) Retaining Ring Internal 2" (2) Back Up Washer 1 5/8" I.D. x 2" O.D.

*To identify - 13118 Stamped On Barrel.

LIFT CYLINDER

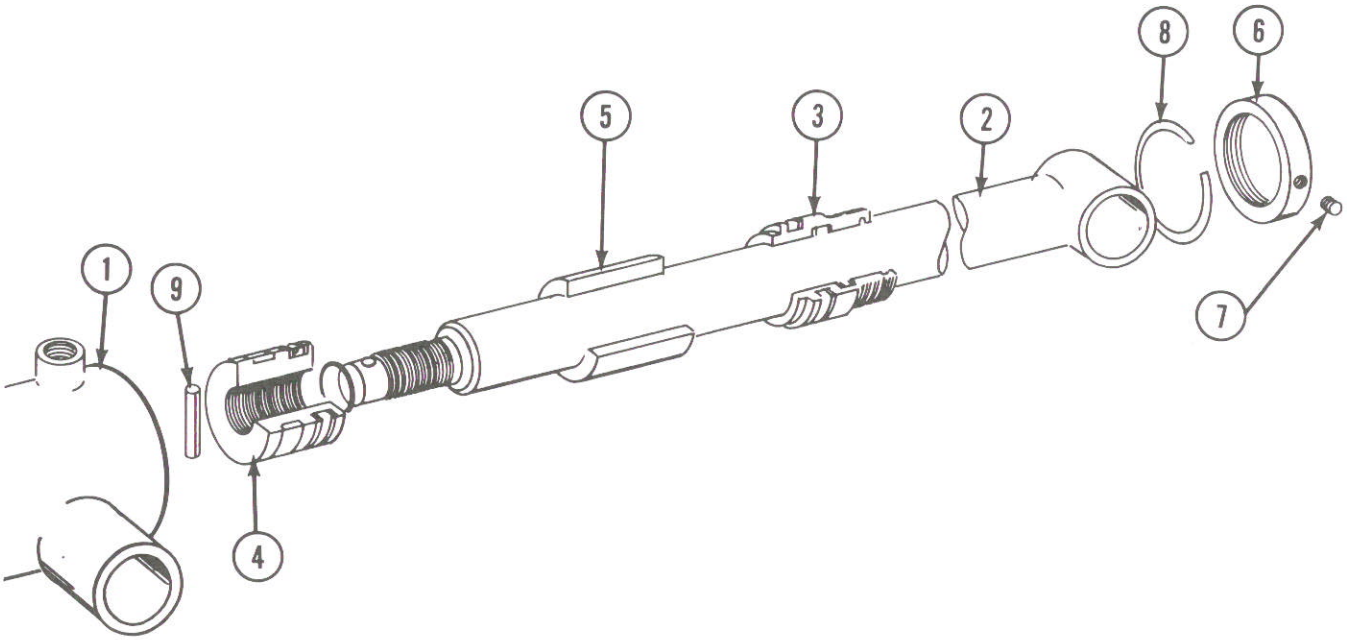

ITEM	PART NO.	DESCRIPTION
1.	R521	Tube Assembly
2.	R520	Shaft Assembly
3.	R128	Head Gland
4.	R129	Piston
5.	R130	Stroke Collar
6.	R131	Head Gland Nut
7.	10114	Set Screw, No. 10-32 x ¼
8.	R132	Wire Ring
9.	10604	Roll Pin
	R133	Seal Kit
*A.	A921	Cylinder Assembly Complete, 3"x10"

* To identify - 13090 Stamped On Barrel

HYDRAULIC SYSTEM, 8R30

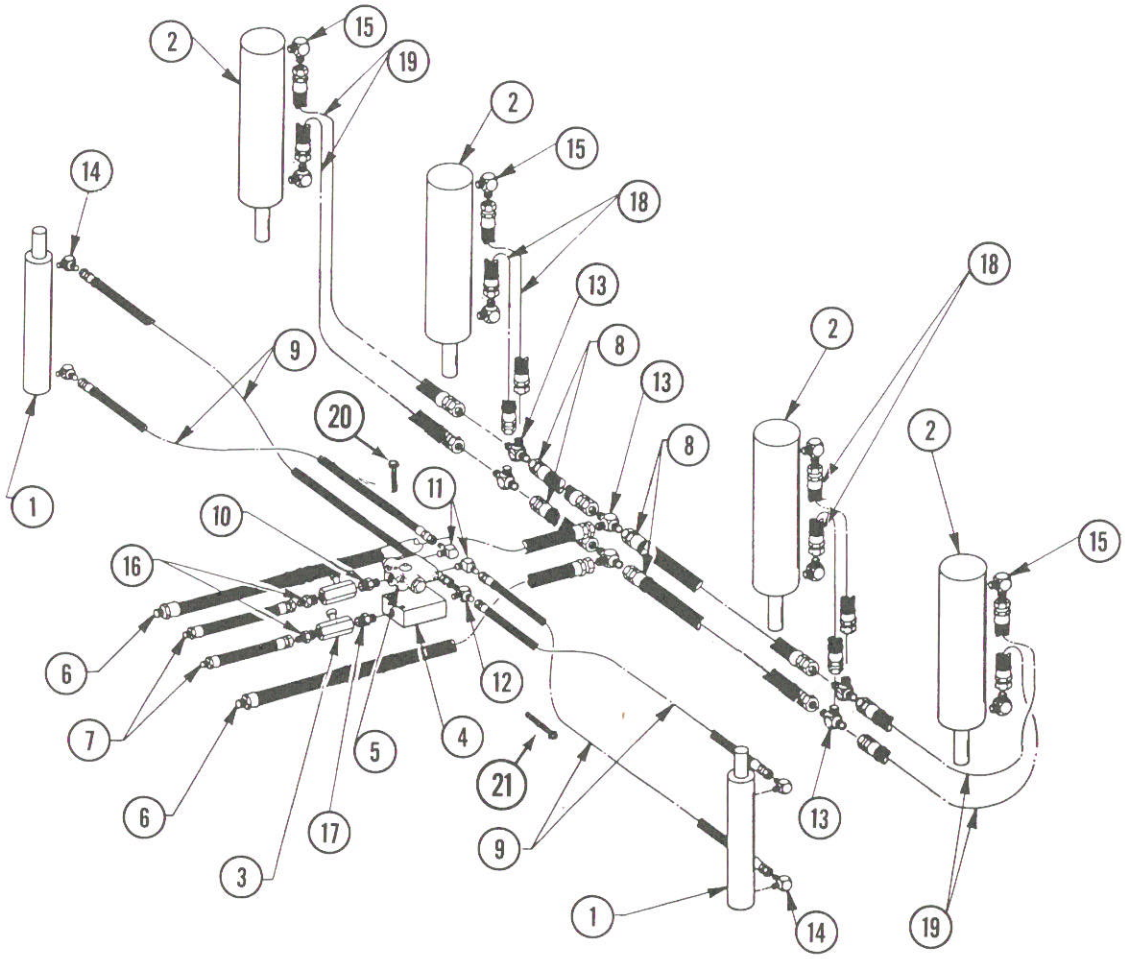

ITEM	PART NO.	DESCRIPTION
1.	A2151	Cylinder, Marker, 2" x 20"
2.	A921	Cylinder, Lift, 3" x 10"
3.	A270	Valve, Flow Control
4.	D2530	Block, Mounting
5.	A282	Valve, Sequencing
6.	A1075	Hose Assembly, 3/8" x 156"
7.	A1128	Hose Assembly, 1/4" x 150"
8.	A1003	Hose Assembly, 3/8" x 27"
9.	A1129	Hose Assembly, 1/4" x 168"
10.	6401-8-6	Adapter, 3/8 MPT to 3/4-16
11.	6801-6-8	Elbow, 90°
12.	2601-6-6	Tee, Run
13.	2603-8	Tee, 3/4-16 JIC
14.	2501-6-8	Elbow, 90°
15.	2501-8-8	Elbow, 90°
16.	2404-6-6	Adapter
17.	5404-6-6	Adapter
18.	A1002	Hose Assembly, 3/8" x 20"
19.	A1019	Hose Assembly, 3/8" x 44"
20.	10062	HHCS, 3/8"-16 x 3"
	10229	Lock Washer, 3/8"
	10101	Hex Nut, 3/8"-16
21.	10004	HHCS, 3/8"-16 x 1 1/4"
	10229	Lock Washer, 3/8"

HYDRAULIC SYSTEM, 8R Wide

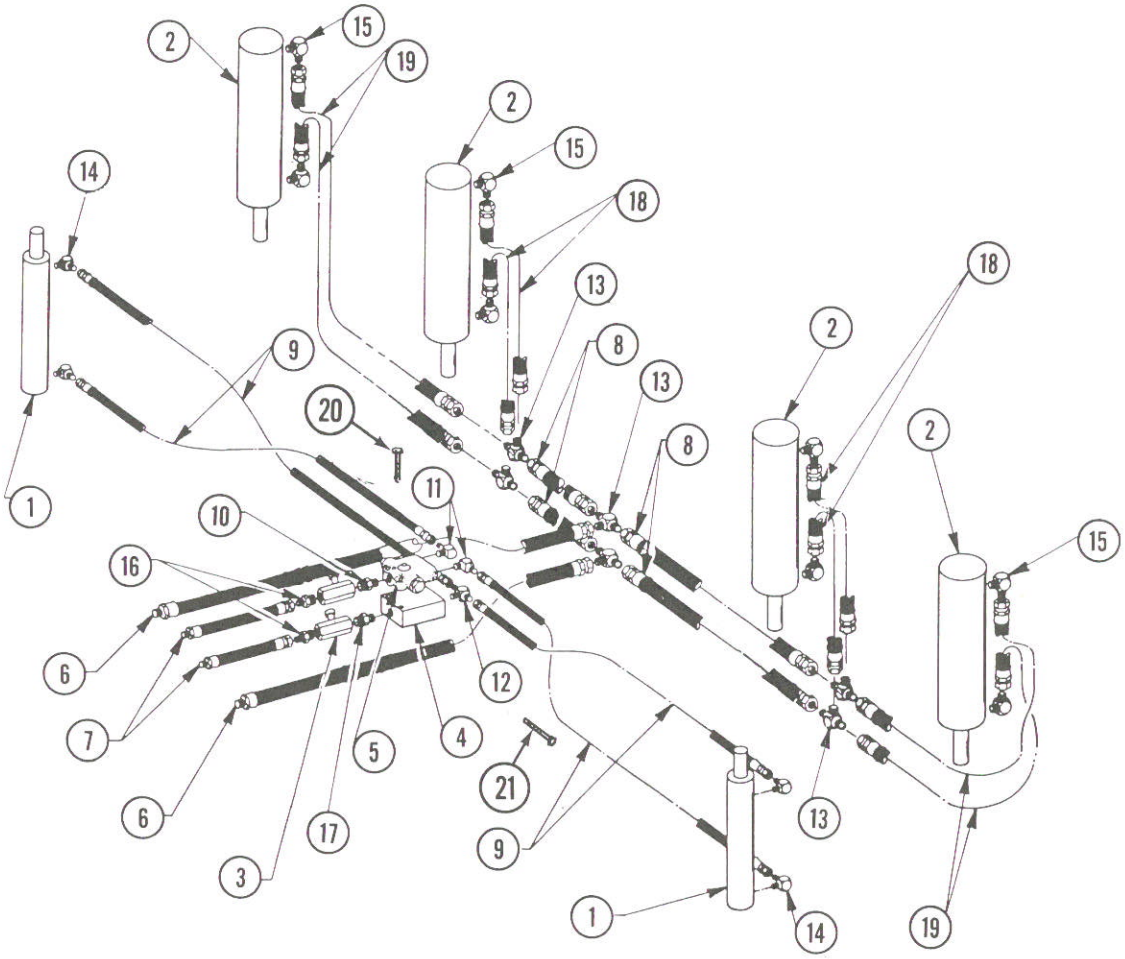

ITEM	PART NO.	DESCRIPTION
1.	A2151	Cylinder, Marker, 2" x 20"
2.	A921	Cylinder, Lift, 3" x 10"
3.	A270	Valve, Flow Control
4.	D2530	Block, Mounting
5.	A282	Valve, Sequencing
6.	A1075	Hose Assembly, 3/8" x 156"
	*A1074	Hose Assembly, 3/8" x 36", Used with extended hitch
7.	A1128	Hose Assembly, 1/4" x 150"
	*A1126	Hose Assembly, 1/4" x 36", Used with extended hitch
8.	A1019	Hose Assembly, 3/8" x 44"
9.	A1117	Hose Assembly, 1/4" x 192"
10.	6401-8-6	Adapter, 3/8 MPT to 3/4-16
11.	6801-6-8	Elbow, 90°
12.	2601-6-6	Tee, Run
13.	2603-8	Tee, 3/4-16 JIC
14.	2501-6-8	Elbow, 90°
15.	2501-8-8	Elbow, 90°
16.	2404-6-6	Adapter
17.	5404-6-6	Adapter
18.	A1002	Hose Assembly, 3/8" x 20"
19.	A1022	Hose Assembly, 3/8" x 60"
20.	10062	HHCS, 3/8"-16 x 3 "
	10229	Lock Washer, 3/8"
	10101	Hex Nut, 3/8"-16
21.	10004	HHCS, 3/8"-16 x 1 1/4"
	10229	Lock Washer, 3/8"
*	5000-8-8	Union, Female, Used on models with extended hitch

HYDRAULIC SYSTEM, 12R30

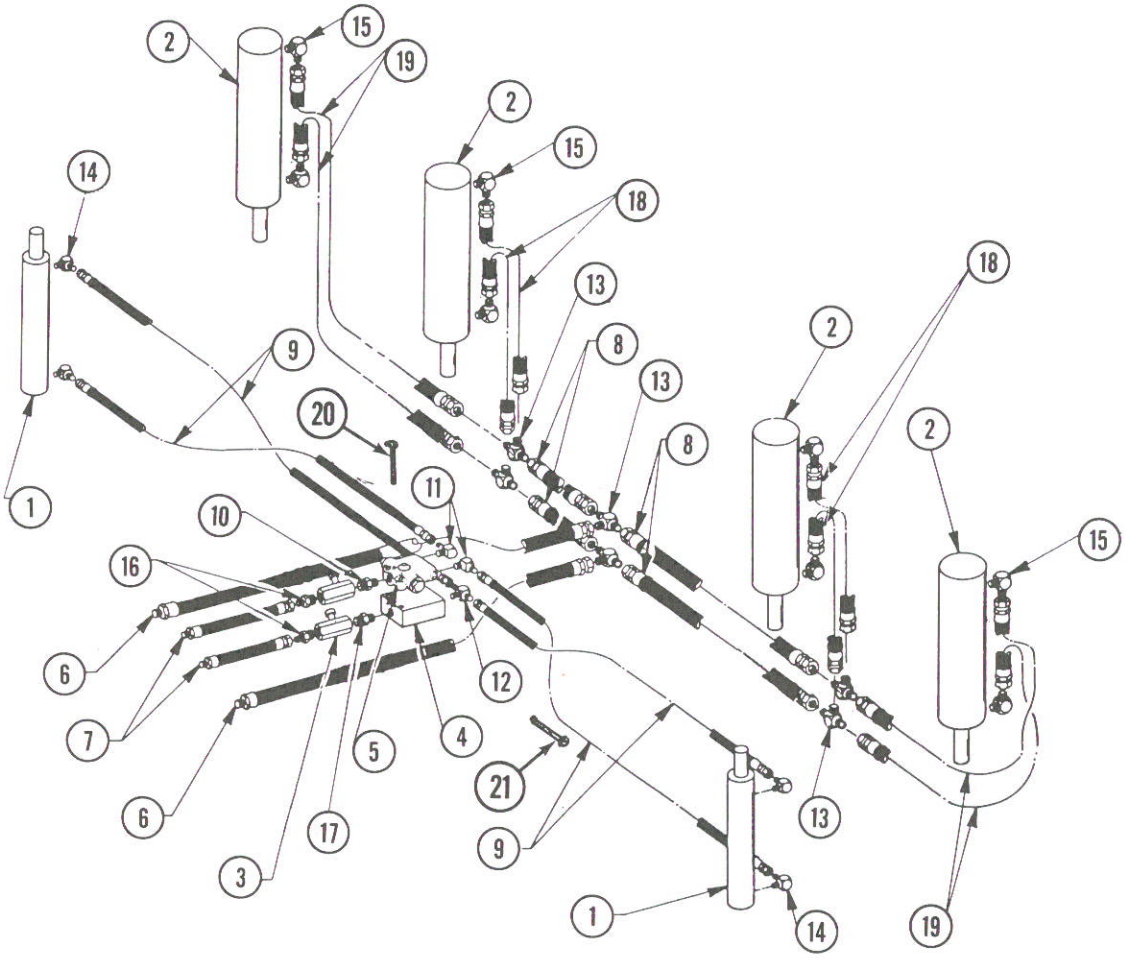

ITEM	PART NO.	DESCRIPTION
1.	A2151	Cylinder, Marker, 2" x 20"
2.	A921	Cylinder, Lift, 3" x 10"
3.	A270	Valve, Flow Control
4.	D2530	Block, Mounting
5.	A282	Valve, Sequencing
6.	A1075	Hose Assembly, 3/8" x 156"
7.	A1128	Hose Assembly, 1/4" x 150"
8.	A1022	Hose Assembly, 3/8" x 60"
9.	A1127	Hose Assembly, 1/4" x 240"
10.	6401-8-6	Adapter, 3/8 MPT to 3/4-16
11.	6801-6-8	Elbow, 90°
12.	2601-6-6	Tee, Run
13.	2603-8	Tee, 3/4-16 JIC
14.	2501-6-8	Elbow, 90°
15.	2501-8-8	Elbow, 90°
16.	2404-6-6	Adapter
17.	5404-6-6	Adapter
18.	A1002	Hose Assembly, 3/8" x 20"
19.	A1019	Hose Assembly, 3/8" x 44"
20.	10062	HHCS, 3/8"-16 x 3"
	10229	Lock Washer, 3/8"
	10101	Hex Nut, 3/8"-16
21.	10004	HHCS, 3/8"-16 x 1 1/4"
	10229	Lock Washer, 3/8"

SEQUENCING VALVE

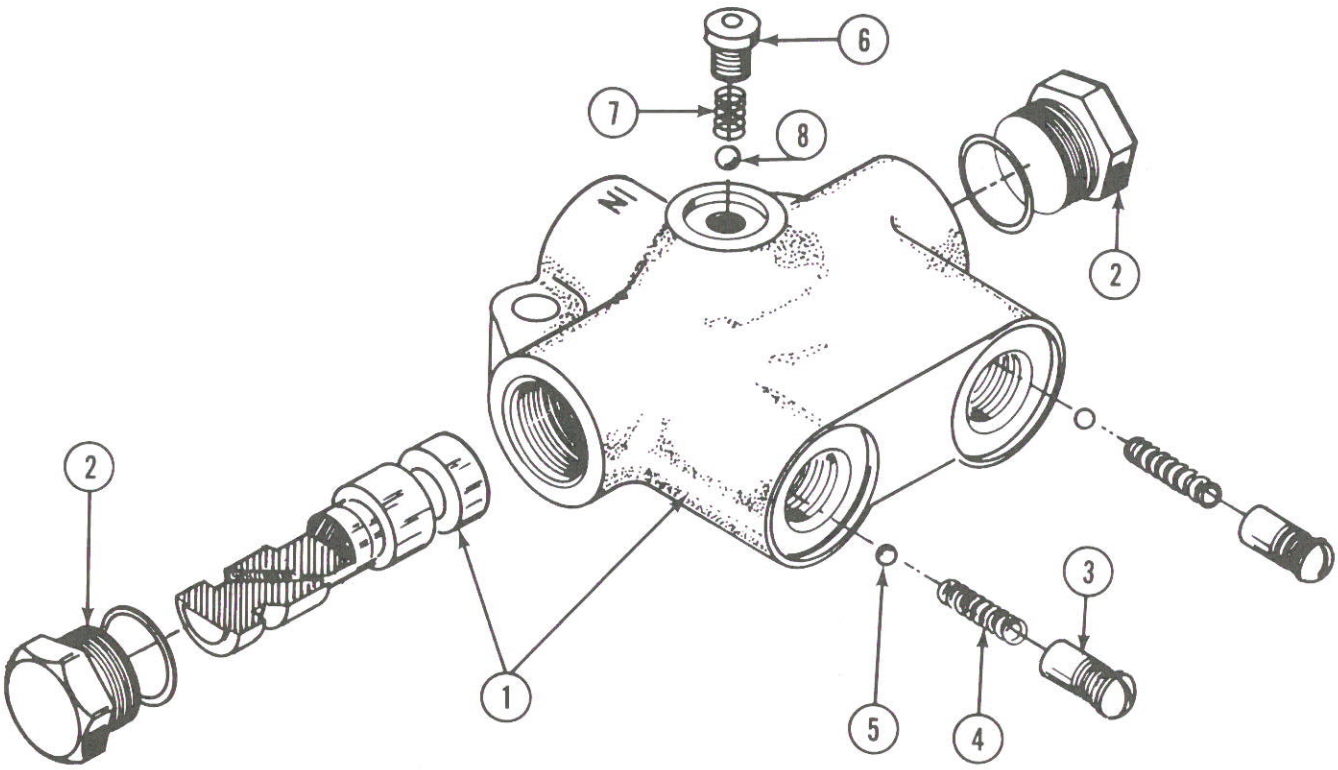

ITEM	PART NO.	DESCRIPTION
1.		Valve Body and Spool
2.	R271	Plug Assembly, O-Ring Boss
3.	R273	Retainer, Check Valve
4.	R277	Spring, Check Valve
5.	R275	Ball, Check, 3/16" Diameter
6.	R274	Plug Assembly, O-Ring Boss
7.	R278	Spring
8.	R276	Ball, 1/4" Diameter
A.	A282	Sequencing Valve, Complete

FLOW CONTROL VALVE

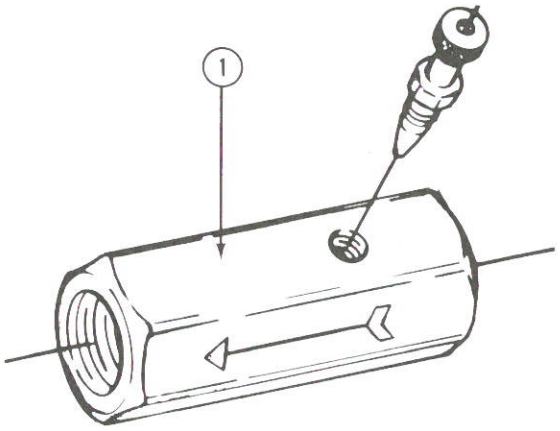

ITEM	PART NO.	DESCRIPTION
1.	A270	Flow Control Valve Assembly, 3/8" NPT (KLF 375)

DECALS, REFLECTORS AND TIE STRAPS

(1)

⚠ WARNING ⚠

TOW ONLY WITH
FARM TRACTOR

(2)

⚠ CAUTION ⚠

STAND CLEAR
OF MARKERS WHEN
IN OPERATION.

7100-4

(3)

PATENT PENDING
7100-26

(4)

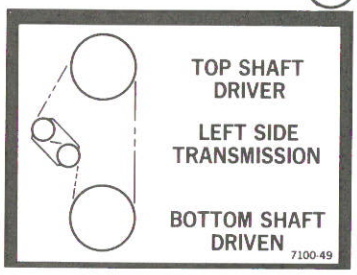

(5)

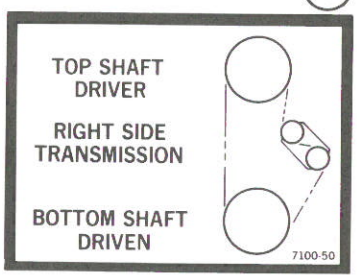

(6)

⚠ WARNING ⚠

RAISE PLANTER COMPLETELY AND INSTALL CYLINDER LOCK-UPS BEFORE FOLDING. FOLD ON LEVEL GROUND. SECURE WINGS WITH SAFETY PINS BEFORE TOWING IN FOLDED POSITION.

(7)

ECONO-FOLD

KINZE® (8)

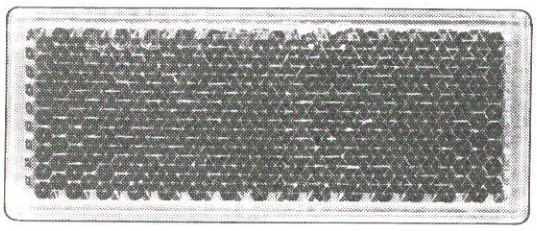

(9)

(10)

(11)



ITEM	PART NO.	DESCRIPTION
1.	7100-3	Decal, Warning
2.	7100-4	Decal, Caution
3.	7100-26	Decal, Patent Pending
4.	7100-49	Decal, Left Side Transmission
5.	7100-50	Decal, Right Side Transmission
6.	7100-51	Decal, Warning
7.	7100-53	Decal, Identification
8.	7100-54	Decal, Kinze
9.	7200-1	Reflector, Red
10.	7200-2	Reflector, Amber
11.	D937	Plate, Serial Number
12.	D1162	Strap, Tie, 28" (Not Shown)
13.	D2117	Strap, Tie, 14 1/2" (Not Shown)

NUMERICAL INDEX

PART NO.	PAGE
A167	36
A243	36
A245	36
A257	36
A268	31
A270	39, 40, 41, 42
A271	31
A282	39, 40, 41, 42
A288	27, 30
A289	27, 31
A450	27
A827	33, 35
A895	29
A899	36
A921	29, 38, 39, 40, 41
A1002	39, 40, 41
A1003	39
A1019	39, 40, 41
A1022	40, 41
A1074	40
A1075	39, 40, 41
A1126	40
A1127	41
A1128	39, 40, 41
A1129	39
A1676	36
A1677	36
A1678	36
A1679	36
A1720	31
A1729	30
A1786	31
A2142	27, 29
A2145	35
A2148	29
A2149	25
A2150	25
A2151	33, 35, 37, 39, 40, 41
A2152	27, 29
A2153	25
A2154	35
A2155	29
A2156	27
A2158	33
A2162	35
A2163	24
A2165	35
A2166	35
A2169	27
A2170	31
A2171	31
A2172	31
A2173	31
A2174	25
A2180	31
A2182	29
A2185	29
A2186	29
A2187	29
A2188	29
A2189	29
A2190	31
A2191	31
A2192	31
A2193	31
A2194	31
A2195	31
A2198	25
A2199	33
A2200	33
A2201	29
A2202	30
A2204	33
A2205	33
A2207	27, 29
A2211	27
A2212	27
A2214	25
A2215	25
A2221	25
A2222	25
A2223	25
A2224	25
A2251	24

PART NO.	PAGE
B156	24
D453-2	33, 35
D453-4	33
D653	33
D740	24
D746	36
D826	27, 29
D830	29
D840	36
D914-46	31
D937	43
D1067	27, 30
D1114	25, 30, 31
D1162	43
D1165	27, 29
D1199-3	31
D1199-5	31
D1199-6	31
D1199-7	31
D1701	33, 35
D1702	33
D1748	24
D2117	43
D2298	31
D2530	39, 40, 41
D2543	30
D2548-28.5	31
D2548-35	31
D2548-58.5	31
D2558	30, 33
D2567	31
D2597	36
D2599	31
D2648	27, 29
D2681	35
D2697	33, 35
D2698	35
D2707	31
D2713	24
D2720	31
D2721	33
D2743	25
D2744	25
D2751	24, 25
D2753	31
D2754	31
R128	38
R129	38
R130	38
R131	38
R132	38
R133	38
R150	36
R151	36
R194	31
R195	31
R255	24
R266	27
R270	27, 29
R271	42
R273	42
R274	42
R275	42
R276	42
R277	42
R278	42
R365	37
R366	37
R368	37
R434	29
R520	38
R521	38
R551	37
R552	37
R601	37

PART NO	PAGE
2100-3	30
2404-6-6	39, 40, 41
2500-1	30
2500-2	30
2500-3	30
2500-6	30
2500-14	31
2500-23	27, 31
2500-24	31
2501-6-8	39, 40, 41
2501-8-8	39, 40, 41
2601-6-6	39, 40, 41
2603-8	39, 40, 41
3200-80	31
3300-40	31
3300-76	31
3302-4	35
3400-1	30
4100-2	24
5000-8-8	40
5404-6-6	39, 40, 41
6401-8-6	39, 40, 41
6801-6-8	39, 40, 41
7100-3	43
7100-4	43
7100-26	43
7100-49	43
7100-50	43
7100-51	43
7100-53	43
7100-54	43
7200-1	43
7200-2	43
10004	39, 40, 41
10007	29
10009	31
10016	27, 35
10017	27, 29
10019	31
10026	29
10030	29
10033	35, 36
10038	35
10039	33, 35
10047	35
10059	24
10062	39, 40, 41
10086	27
10087	29
10088	27
10101	35, 39, 40, 41
10102	27, 29, 30, 33, 35, 36
10104	25, 30, 31
10105	24, 29
10106	31
10107	24, 31
10109	25, 31
10111	24, 33, 35
10112	29
10114	38
10152	24
10157	24
10168	36
10169	24
10176	25
10205	31
10210	35
10217	31
10226	33, 35
10228	27, 29, 33, 35, 36
10229	35, 39, 40, 41
10230	25, 29, 30, 31
10231	24, 29
10232	31
10233	31
10303	31
10313	27, 30
10435	27, 30
10455	27, 31
10456	31
10460	27, 29, 31, 33, 35
10461	25
10463	33, 35
10470	36

PART NO.	PAGE
10527	30
10549	23
10558	31
10561	29
10566	27, 31
10602	31
10604	38
10641	25, 27, 29, 33, 35
10670	24, 25, 29
10671	25
10722	36
10724	36
10725	36