MODEL 3005
RIGID FRAME PLANTER

PARTS MANUAL

M0298-02 Rev. 6/21

This manual applies to: Model: 3005 Pull Type Planters
2021 Production And On

Record serial number of your planter and date purchased:

Serial Number _____

Date Purchased _____

Information in this manual was current at time of printing. However, due to Kinze's ongoing product improvement, production changes may cause your machine to appear slightly different in detail. Kinze Manufacturing, Inc. reserves the right to change specifications or design without notice and without incurring obligation to install the same on machines previously manufactured.

Right hand (R.H.) and left hand (L.H.), as used throughout this manual, are determined by facing in the direction the machine will travel when in use, unless otherwise stated.

Hardware Size / Tool Required			
¼" = 7⁄16"	7⁄16" = ⅝" (nut for 7⁄16" hardware uses 11⁄16" tool)	¾" = 1⅛"	1¼" = 1⅞"
5⁄16" = ½"	½" = ¾"	⅞" = 1 5⁄16"	1½" = 2¼"
⅜" = 9⁄16"	⅝" = 15⁄16"	1" = 1½"	

Kinze® and the Kinze® logo are registered trademarks of Kinze Manufacturing, Inc.

This page left blank intentionally.

ROW UNIT

Pull Row Unit Assembly P1
Shank Assembly, Seed Tube, and Depth Adjustment P3
Parallel Arms, Mounting Support Plate, and Quick Adjustable Down Force Springs P5
15" Seed Opener Disc Blade/Bearing Assembly and Scrapers P7
Gauge Wheels P9
"V" Closing Wheels P11
Hopper Support and Meter Drive P13
Row Unit Idler P15
Seed Hopper and Lid P16
Finger Pickup Seed Meter P17
Brush-Type Seed Meter 2.0 . . . . . P19
Granular Chemical P21
Granular Chemical Hopper and Hopper Panel Extension P23
Granular Chemical Meter and Meter Drive P24
Row Unit Mounted No Till Coulter P25
Coulter Mounted Residue Wheels P27

SPLIT ROW UNIT

Split Row Unit Assembly P29
Parallel Arms and Face Plate (Split Row) P31
Shank and Depth Adjustment (Split Row) P33
Push Unit Idler Assembly P35
Split Row Unit Drive P36
Split Row Self-Leveling Hitch Extension P38

BASE MACHINE

Hitch and Frame Assembly/Safety Chain P41
Safety Chain P43
Transport and Ground Drive Wheel Assembly P45
Contact Wheel and Arm Assembly P47
Driveline, 4 Row 30" P49
Driveline, 6 Row 30" and 8 Row 30" P50
Seed Rate Transmission Assembly P51
Row Marker Assembly, Conventional 4 Row 30" and 6 Row 30" P55
Row Marker Assembly, Two-Fold Low Profile 8 Row 30" P57
Row Marker Spindle/Hub/Blade P59
Water Tank Assembly P61

HYDRAULICS

Master Lift Cylinder P63
Slave Lift Cylinder P64
Lift Assist Cylinder, 6 Row 30" and 8 Row 30" P65
Row Marker Cylinder, 4 Row 30" and 6 Row 30" P66
Row Marker Cylinder, 8 Row 30" P67
Split Row Lift Cylinder P68
Row Marker Sequencing/Flow Control Valve P70
Hydraulic System, 4 Row 30" Conventional Row Marker P72
Hydraulic System, 6 Row 30" Conventional Row Marker P74
Hydraulic System, 8 Row 30" Two-Fold Low Profile Row Marker P76

ELECTRONICS

Electrical Components and SMV Sign P79
KPM III Electronic Seed Monitor P81

FERTILIZER

HD Single Disc Fertilizer Opener (Blade and Drop Tube) P85
Notched Single Disc Fertilizer Opener P87
Depth/Gauge Wheel Attachment for Notched Single Disc Fertilizer Opener P91
Fertilizer Opener Mounting Bar (Double Disc and Notched Single Disc Fertilizer Openers) P92
Dry Fertilizer Transmission Assembly P93
Dry Fertilizer Hopper and Mounts P95
Dry Fertilizer Couplers/Shafts P97
Dry Fertilizer Couplers/Shafts P98
Liquid Fertilizer Tanks, Saddle, Mounts, Hoses, and Fittings, 4 Row P99
Liquid Fertilizer Tanks, Saddles, Mounts, Hoses, and Fittings, 6 and 8 Row P101
Liquid Fertilizer Piston Pump Drive P103
Liquid Fertilizer Piston Pump Uses 18 Tooth Sprocket P106
Liquid Fertilizer Piston Pump Flow Divider P108
Liquid Fertilizer Tube In Furrow P110

MISCELLANEOUS

Decals, Paint, and Miscellaneous P111
Numerical Index P119

This page left blank intentionally.

Pull Row Unit Assembly

NOTE: Row unit assembly does not include the following: seed meter assembly, seed tube assembly, row unit hopper assembly, closing wheels, or seed meter clutch.

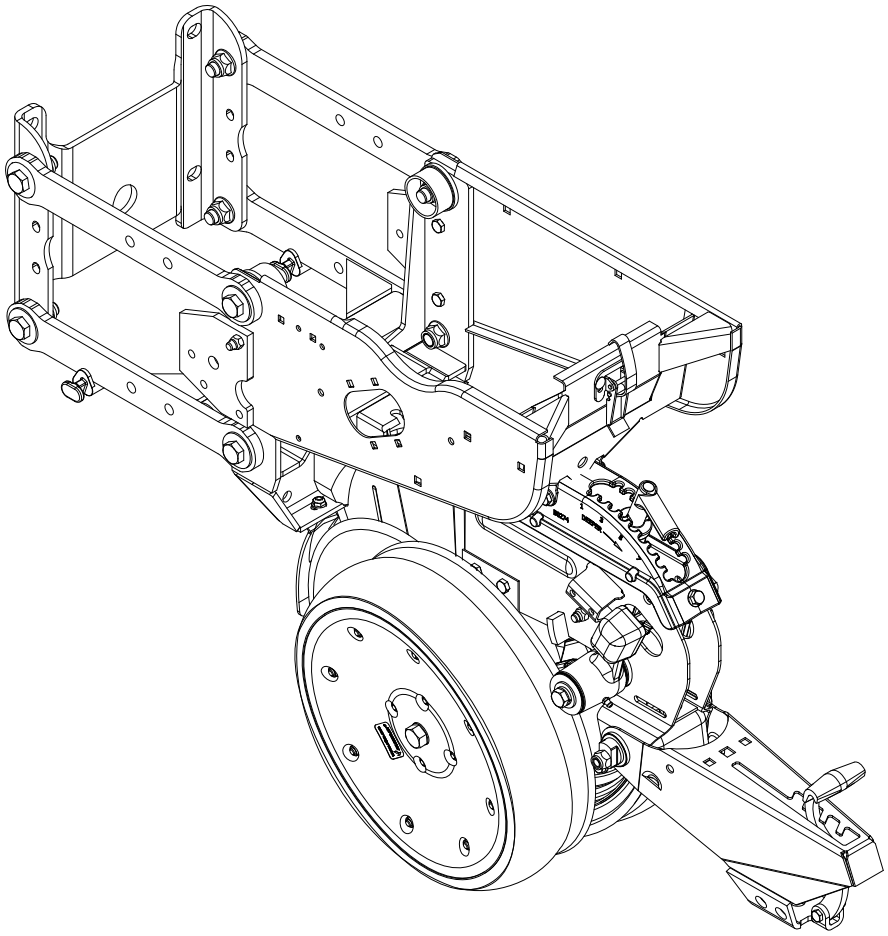

ITEM	PART NO.	QTY. (Per Row)	DESCRIPTION
1	G10502X	1	Pull Row Unit Assembly

This page left blank intentionally.

(IP1577)

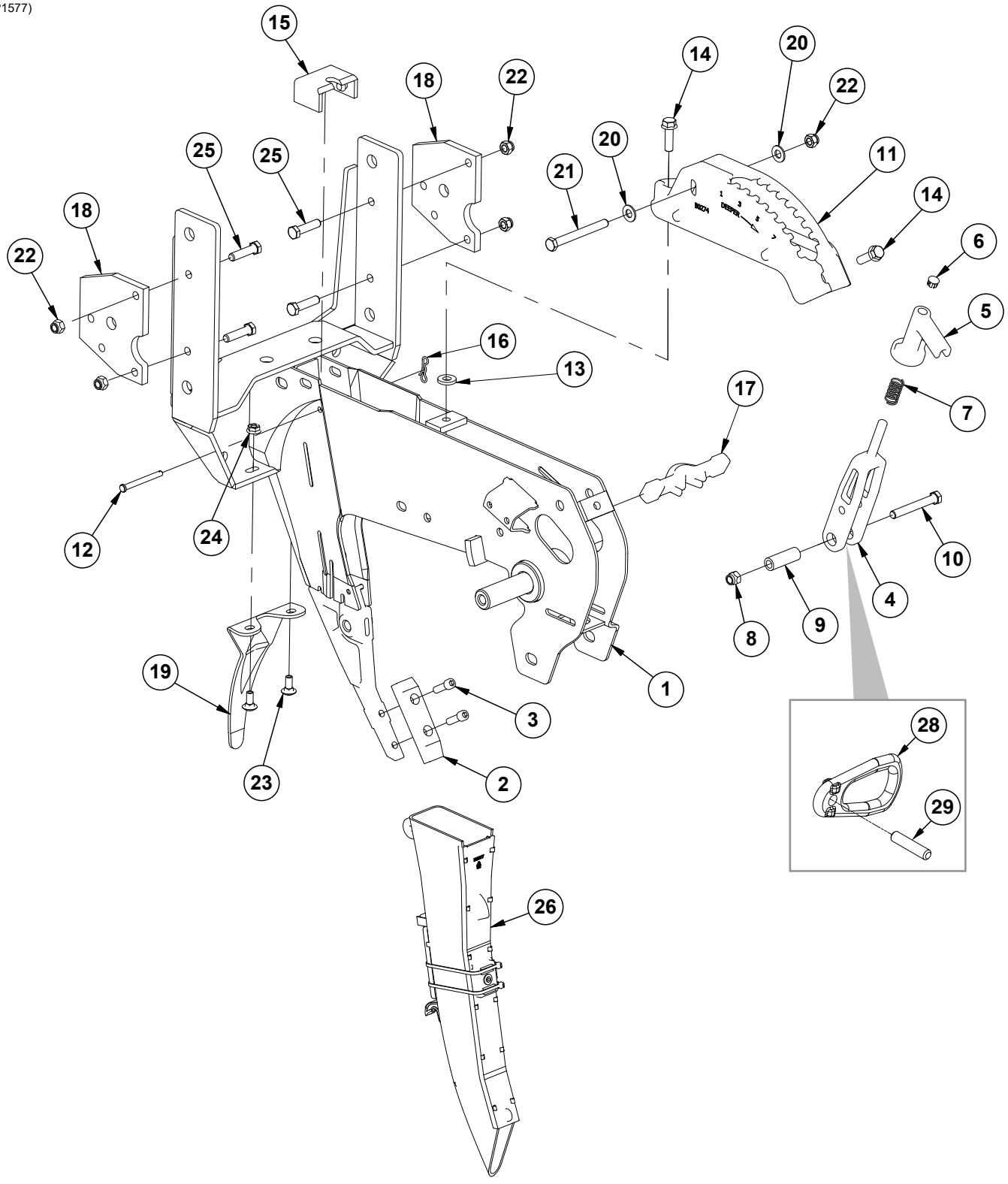
15
18
22
14
20
22
25
25
20
21
11
14
18
22
6
5
16
13
17
7
12
24
10
4
8
9
19
1
3
28
23
2
29
26

ITEM	PART NO.	QTY. (Per Row)	DESCRIPTION
1	GA10157 GD11001 G10438	1 - -	Shank W/Gauge Wheel Pivot Spindle and Set Screw Spindle Hex Head Cap Screw, ½"-13 x ¾"
2	G10038601	1	Scraper
3	G10912	2	Hex Socket Head Cap Screw, 5/16"-18 x 1", Grade 8
4	GB0267	1	Lever, Depth Adjustment
5	GB0266	1	Handle, Depth Adjustment
6	GD3612	1	Cap Plug
7	GD10993	1	Spring
8	G11591	1	Hex Lock Nut, ⅜"-24, Grade C
9	GD11259	1	Sleeve, ⅜" I.D. x ⅝" O.D. x 1²⁵⁄₃₂" Long
10	G11592	1	Hex Head Cap Screw, ⅜"-24 x 2¾", Grade 8
11	GB0274	1	Cover, Depth Adjustment
12	G10551	1	Clevis Pin, ¼" x 2 ½"
13	G10207	1	Washer, ⅞" O.D. x ¹³⁄₃₂" I.D. x .134" (If Applicable)
14	G11015	2	Hex Washer Head Cap Screw, ⅜"-16 x 1¼"
15	GD16245	1	Sun Shade (Rubber)
16	G10122301	1	Bow Tie Cotter Pin
17	GB0265	1	Pivot Link, Depth Adjustment
18	GD24545	2	Row Unit Stop
19	GD28390	1	Shield
20	G11387	2	Flat Washer, ⅜" SAE
21	G10061	1	Hex Head Cap Screw, 3/8"-16 x 3 ½"
22	G10108	5	Lock Nut, ⅜"-16
23	G10312	2	Carriage Bolt, ⁵⁄₁₆"-18 x ¾"
24	G10620	2	Serrated Flange Nut, ⁵⁄₁₆"-18
25	G10003	4	Hex Head Cap Screw, ⅜"-16 x 1½"
26	GA21515	1	Seed Tube Assembly
27	---	---	---
28	GB0285	1	Collar, Depth Adjustment
29	G10402701	1	Pin, ⅜" x 1⅔"

(IP1578)

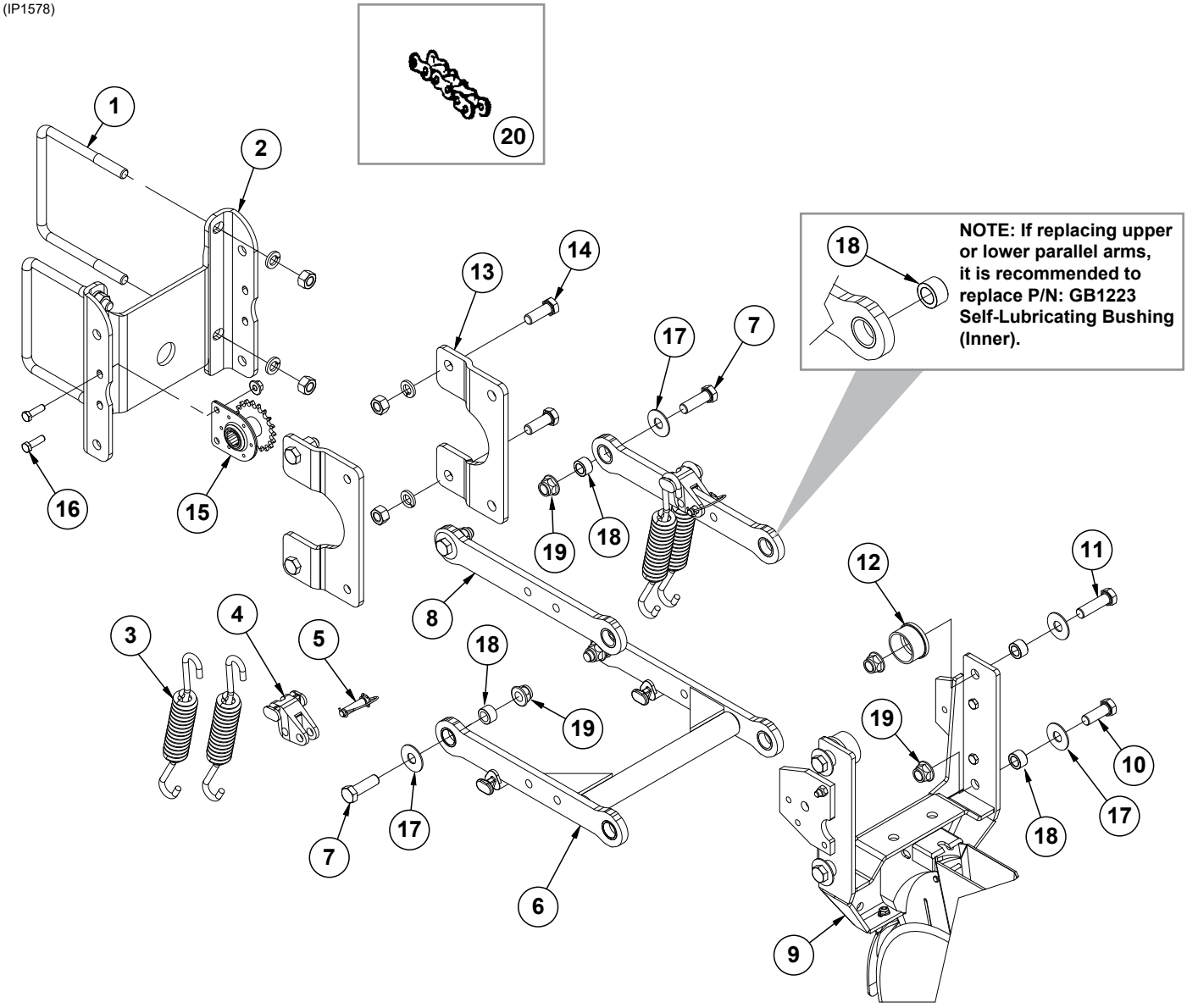
1
2
20
13
14
17
7
18
NOTE: If replacing upper or lower parallel arms, it is recommended to replace P/N: GB1223 Self-Lubricating Bushing (Inner).
16
15
19
18
8
12
11
3
4
5
18
19
19
10
17
18
17
7
6
9

ITEM	PART NO.	QTY. (Per Row)	DESCRIPTION
1	GD1113 G10230 G10104	2 4 4	U-Bolt, 5" x 7" x ⅝"-11 Lock Washer, ⅝" Hex Nut, ⅝"-11
2	GD10036	1	Mounting Support Plate
3	GD21337	4	Heavy Duty Down Pressure Spring
4	GB0186	2	Spring Anchor
5	GD14217	2	Tab Lock Pin, 7/16" x 1½"
6	G10011201 GB1224	1	Lower Parallel Arm Assembly Self-Lubricating Bushing, 1¼" O.D. x 1" I.D. x ½" (Included in G10011201)
7	G10732	4	Hex Head Cap Screw, ⅝"-18 x 2"
8	G10011101 GB1224	2 2	Upper Parallel Arm Assembly Self-Lubricating Bushing, 1¼" O.D. x 1" I.D. x ½" (Included in G10011101)
9	---	1	See "Shank Assembly, Seed Tube, and Depth Adjustment" on page P3
10	G10751	2	Hex Head Cap Screw, ⅝"-18 x 1¾"
11	G10752	2	Hex Head Cap Screw, ⅝"-18 x 2¼"
12	GB0314	2	Hopper Mount
13	GB0366	2	Extension Bracket
14	G10005 G10230 G10104	4 4 4	Hex Head Cap Screw, ⅝"-11 x 1¾" Lock Washer, ⅝" Hex Nut, ⅝"-11
15	GA1720	1	Bearing/Sprocket, ⅞" Hex Bore
16	G10004 G11091	2 2	Hex Head Cap Screw, ⅜"-16 x 1¼" Serrated Flange Nut, ⅜"-16
17	G11976	8	Flat Washer, ⅝" x 1¾"
18	GB1223	8	Self-Lubricating Bushing
19	G11514	8	Lock Nut, ⅝"-18
20	G3303-98 G3303-16 GR0196	1 1 -	Chain, No. 41, 98 Pitch Including Connector Link (Mechanical) Chain, No. 41, 16 Pitch Including Connector Link (Used W/Row Unit Extension Brackets) Connector Link, No. 41
A	G6325X	-	U-Bolt Package For 5" x 7" Toolbar, Includes: (2) GD1113, (4) G10230, (4) G10104
B	G1K758	-	Pull Row Unit Parallel Arm Kit, Includes: (2) G10011101, (1) G10011201, (8) GB1223, (8) G11976, (4) G10732, (2) G10751, (2) G10752, (8) G11514, (1) IS1066

(IP1579)

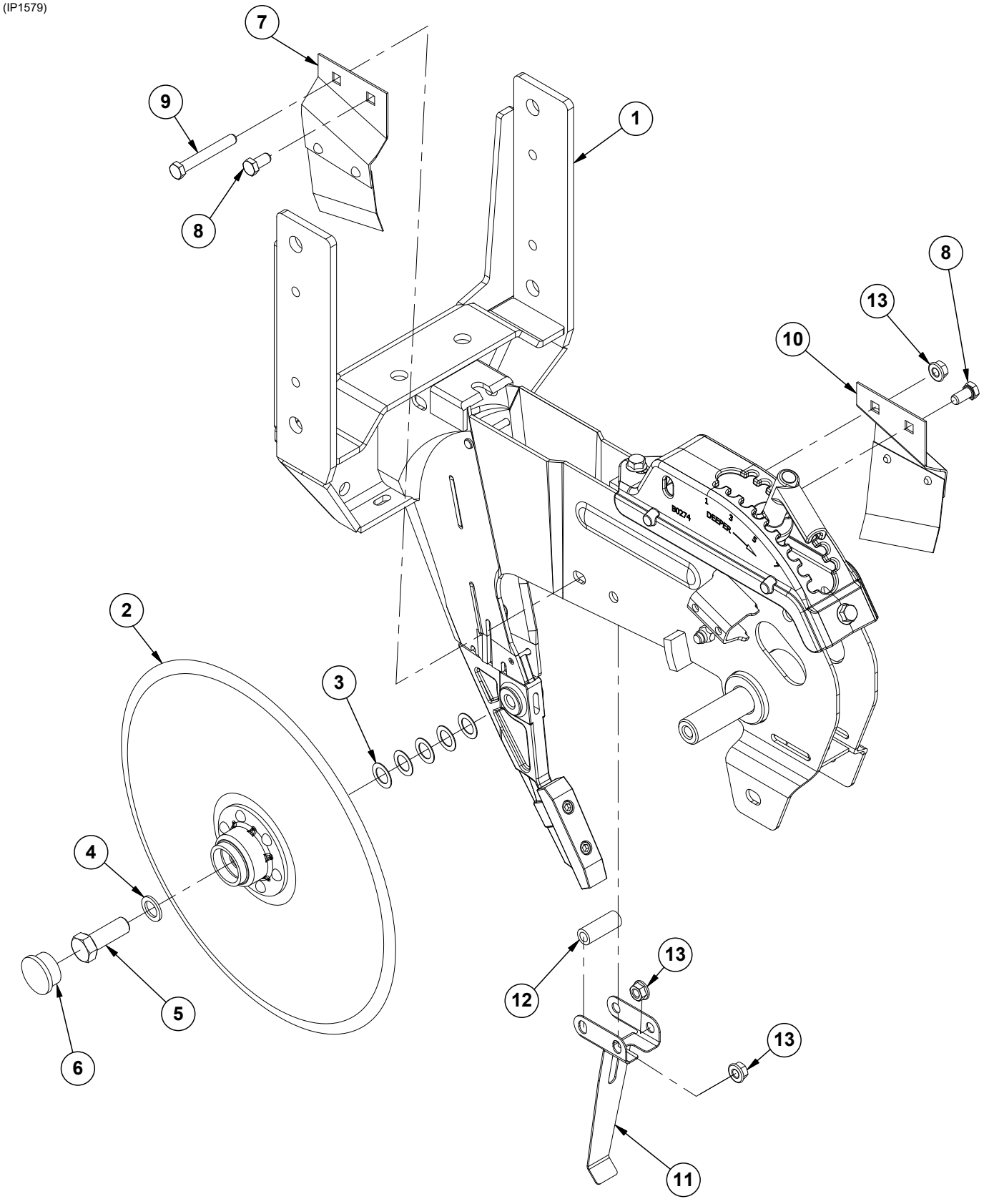

ITEM	PART NO.	QTY. (Per Row)	DESCRIPTION
1	G10037301	1	See "Shank Assembly, Seed Tube, and Depth Adjustment" on page P3
2	G10018801	2	Disc and Bearing Assembly
	GA26920	1	Bearing (Included W/G10018801)
	GD11306	1	Disc Blade, 3.5 mm x 15" (Included W/G10018801)
	GD36860	1	Bearing Housing (Included W/G10018801)
	GD36990	6	Rivet, ¼" x 9⁄16" (Included W/G10018801)
3	GD30725	10	Machine Bushing, 5⁄8" (.030" Thick) (5 Per)
4	G10204	2	Special Machine Bushing, 5⁄8" x 1" O.D.
5	GD36856	1	Opener Blade Bolt, 5⁄8"-11 x 1¾", Grade 5
	G10005	1	Hex Head Cap Screw, 5⁄8"-11 x 1¾"
6	G10090401	2	Plastic Ribbed Hub Cap (1 Per)
7	GA2012L	1	Disc Scraper, L.H.
8	G10002	2	Hex Head Cap Screw, 3⁄8"-16 x ¾"
9	G10325	1	Hex Head Cap Screw, 3⁄8"-16 x 2¾"
10	GA2012R	1	Disc Scraper, R.H.
11	GD35444	1	Seed Tube Bracket
12	GD2971-31	1	Sleeve, 3⁄8" I.D x 5⁄8" O.D. x 1.78" Long
13	G10622	3	Serrated Flange Nut, 3⁄8"-16

(IP1580)

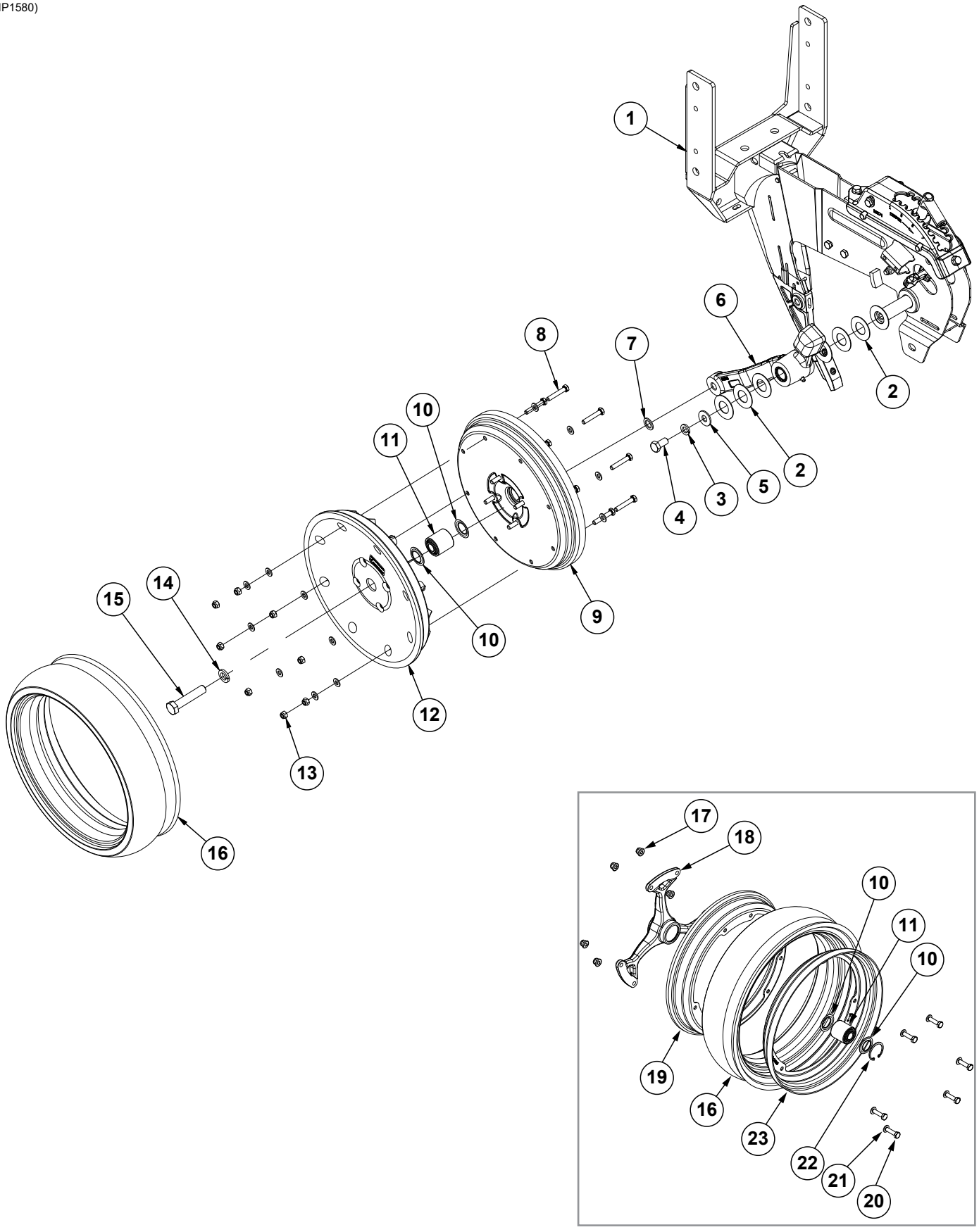

ITEM	PART NO.	QTY. (Per Row)	DESCRIPTION
1	---	-	See "Shank Assembly, Seed Tube, and Depth Adjustment" on page P3
2	G10940	7	Machine Bushing, 1" (.048" Thick)
3	G10228	2	Lock Washer, ½"
4	G10014	2	Hex Head Cap Screw, ½"-13 x 1"
5	G10216	2	Washer, ½" USS
6	GA21677 GA21676 GD10991 GB0276	1 - 2 2	Wheel Arm W/Grease Fitting, Bushings, and Seals, L.H. (Shown) Wheel Arm W/Grease Fitting, Bushings, and Seals, R.H. Seal (Per Arm) (Included W/GA21677 and GA21676) Bushing, 1" I.D. x 1¼" O.D. x 1" Long (Per Arm) (Included W/GA21677 and GA21676)
7	G10397801	1	Special Machine Bushing, ⅝" x 1" O.D.
8	G10031 G11386	8 8	Carriage Bolt, ⅝"-18 x 1¾" Flat Washer, ⅝" SAE
9	G10028701 G10019 G11386	1 4 4	Half Gauge Wheel Hex Head Cap Screw, ⅝"-18 x 1" Flat Washer, ⅝" SAE
10	GD36713	2	Gauge Wheel Dust Shield
11	GA6171	1	Bearing
12	GD36709	1	Half Gauge Wheel
13	G10109 G11386	12 12	Lock Nut, ⅝"-18 Flat Washer, ⅝" SAE
14	G10230	1	Lock Washer, ⅝"
15	G10010	1	Hex Head Cap Screw, ⅝"-11 x 3"
16	G10028601	1	Tire, 4½" x 16
17	G10335001	6	Flange Wheel
18	G10334701	1	Flange Hub
19	G10334901	1	Flange Wheel
20	G10335101	6	Screw, M8 x 30/8.8
21	G11386	6	Flat Washer, ⅝" SAE
22	G10335201	1	Elastic Ring
23	G10334801	1	Flange Wheel
A	G10028801	-	Standard Gauge Wheel Complete (Items 8-13 and 16)
B	G1K296	-	Gauge Wheel Arm Bushing and Seal Driver Kit, Includes: (1) Seal Driver, (1) Bushing Driver, (1) Instruction
C	G10322501	-	Spoked Gauge Wheel Complete (Items 10-11 and 16-23)

(IP1581)

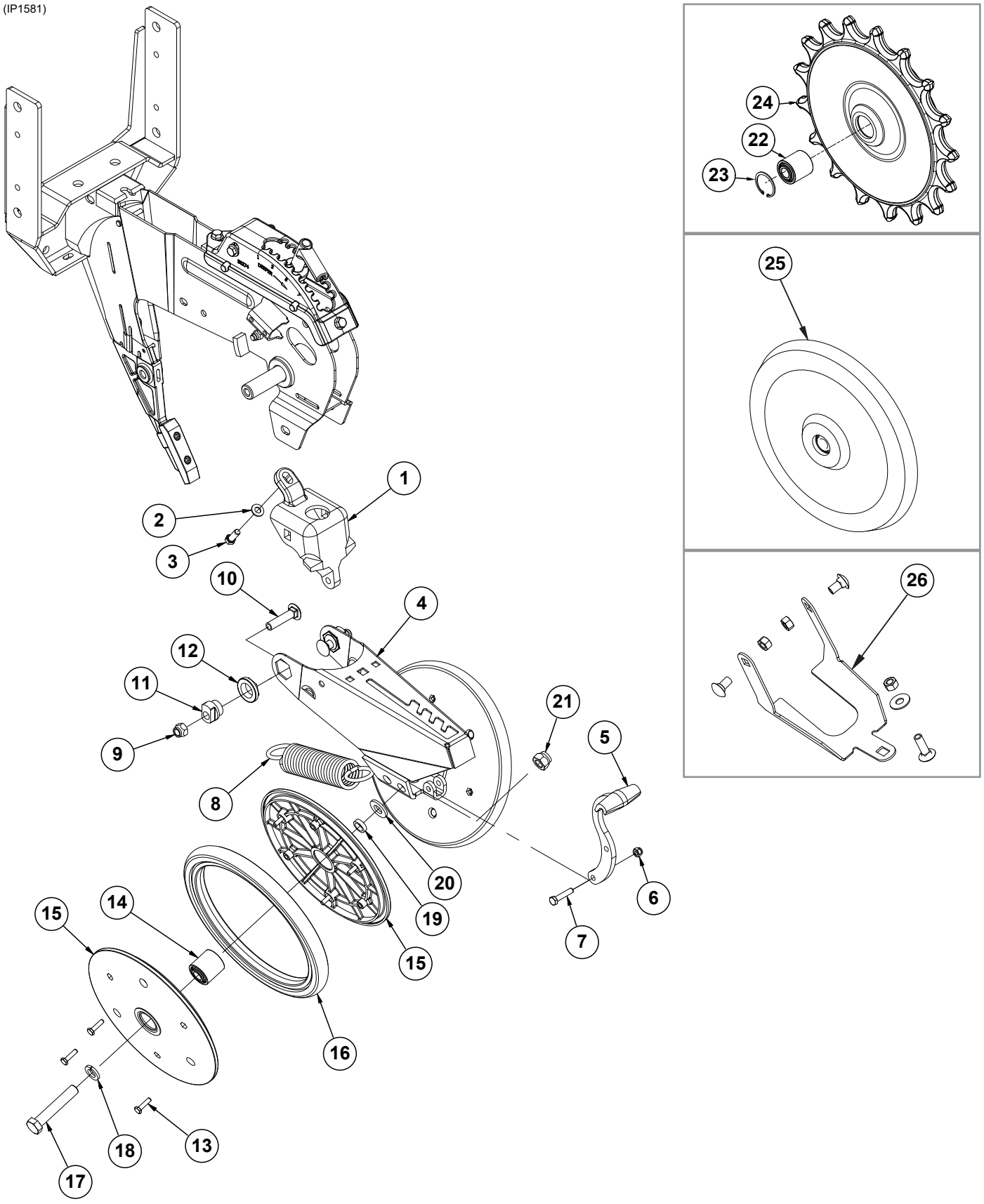

ITEM	PART NO.	QTY. (Per Row)	DESCRIPTION
1	GB0268	1	Wheel Arm Mount
2	G11387	1	Flat Washer, ⅜" SAE
3	G10001	1	Hex Head Cap Screw, ⅜"-16 x 1"
4	GA15197	1	Closing Wheel Arm
5	GB0254	1	Lever
6	G10109	1	Lock Nut, 5⁄16"-18, Grade 8
7	G10133	1	Hex Head Cap Screw, 5⁄16"-18 x 1½"
8	GD8460	1	Spring
9	G10111	2	Lock Nut, ½"-13
10	G11419	2	Carriage Bolt, ½"-13 x 2¼"
11	GB0239	2	Eccentric Bushing
12	GB0282	2	Stepped Bushing
13	G10064	6	Hex Head Cap Screw, ¼"-20 x 1"
14	GA6171	1	Bearing
15	GD9120	2	Nylon Half Wheel
16	GD1085	1	Rubber Tire, 1" x 12"
17	G10013	2	Hex Head Cap Screw, ⅝"-11 x 3½"
18	G10230	2	Lock Washer, ⅝"
19	GD1109	2	Bushing, 41⁄64" I.D. x ⅞" O.D. x ¼" Long
20	G11391	2	Flat Washer, ⅝" SAE
21	G10107	2	Lock Nut, ⅝"-11
22	GA6171	1	Bearing
23	G11862	1	Internal Retaining Ring
24	GA26958	1	Spiked Closing Wheel Assembly (Includes items 22 and 23)
25	GA6597	1	Cast Iron Closing Wheel W/Bearing
	GA6171	1	Bearing
26	G1K345	-	Closing Wheel Shield Kit W/Hardware and Instruction
	GD26146	1	Closing Wheel Shield (Included W/G1K345)
	G10599	1	Carriage Bolt, ⅜"-16 x 1¼" (Included W/G1K345)
	G10308	2	Carriage Bolt, ⅜"-16 x ¾" (Included W/G1K345)
	G10101	3	Hex Nut, ⅜"-16 (Included W/G1K345)
	G10229	3	Lock Washer, ⅜" (Included W/G1K345)
	G11387	1	Hardened Washer, ⅜" SAE (Included W/G1K345)
A	GA6434	-	Rubber Closing Wheel Complete W/Bearing (Items 13-16)

(IP1582)

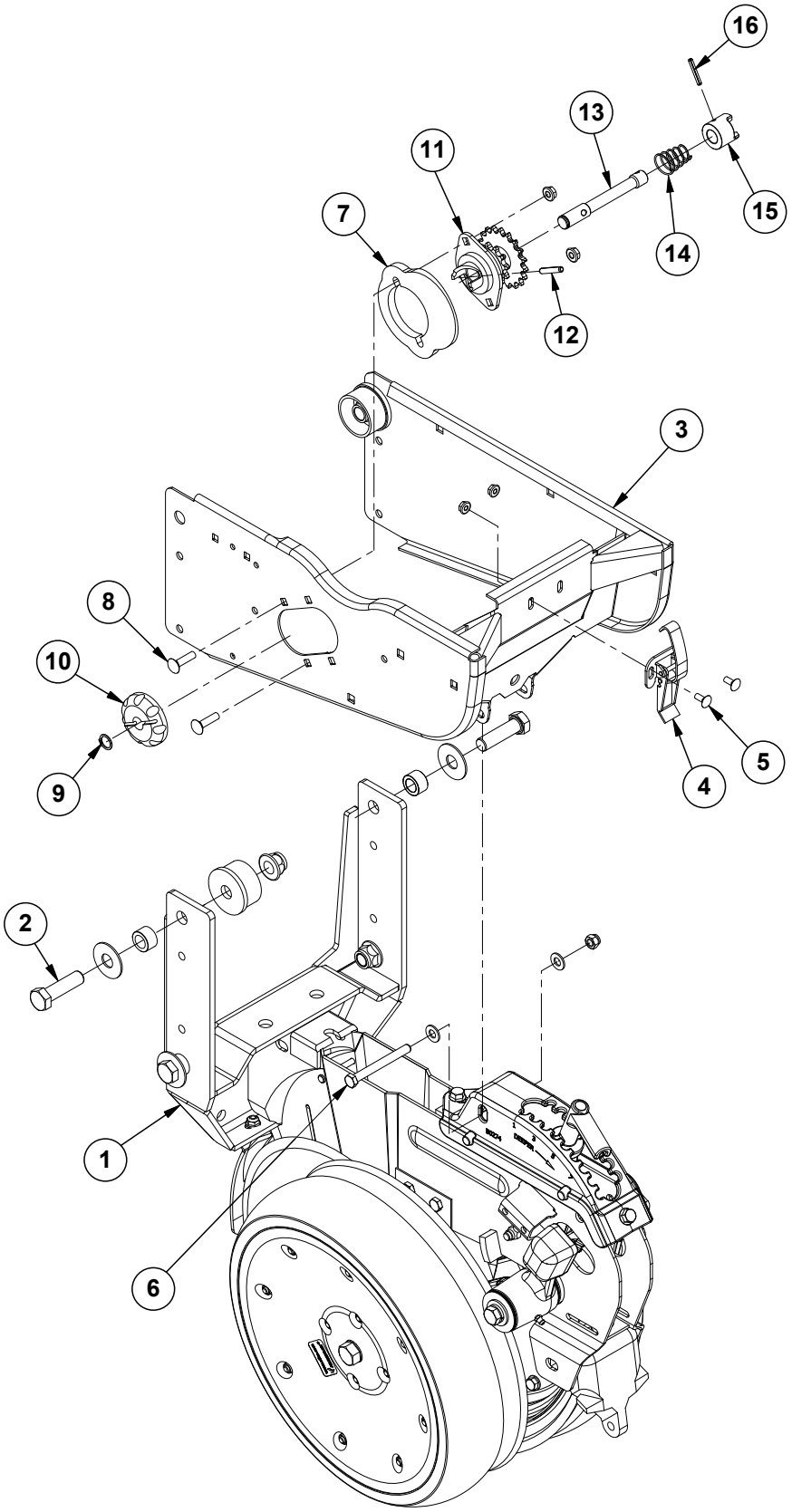

ITEM	PART NO.	QTY. (Per Row)	DESCRIPTION
1	---	1	See "Shank Assembly, Seed Tube, and Depth Adjustment" on page P3
2	G10752	2	Hex Head Cap Screw, ⅝"-18 x 2¼"
3	G10329801	1	Hopper Support
4	GA2007	1	Hopper Hold Down Latch
5	G10309 G10621	2 2	Carriage Bolt, ¼"-20 x ⅝", Grade 2 Serrated Flange Nut, ¼"-20
6	G10061 G11387 G10108	1 2 1	Hex Head Cap Screw, ⅜"-16 x 3½" Flat Washer, ⅜" SAE Lock Nut, ⅜"-16
7	GB0331	1	Clutch Adapter Plate
8	G10338 G10620	2 2	Carriage Bolt, 5⁄16"-18 x 1¼" Serrated Flange Nut, 5⁄16"-18
9	G10567	1	External Retaining Ring, ⅝"
10	GD11239	1	Knob
11	GA10137	1	Double Sprocket and Bearing, Drive Clutch, 11/19 Tooth
12	G10602	1	Spring Pin, ¼" x 1½"
13	GD29507	1	Clutch Shaft
14	GD11413	1	Spring
15	GB0278	1	Coupler
16	G10546	1	Spring Pin, 3⁄16" x 1¼"
A	GA10151	-	Seed Meter Clutch Assembly, 11/19 Tooth (Items 9-16)

(IP1583)

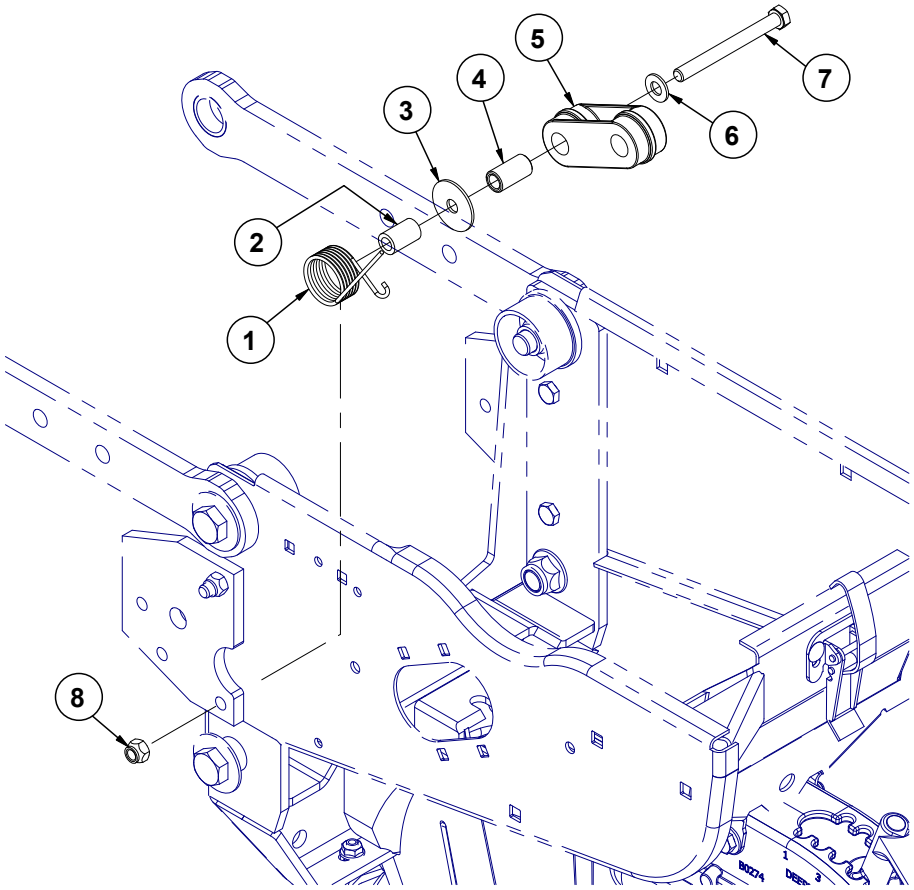

ITEM	PART NO.	QTY. (Per Row)	DESCRIPTION
1	GD1065	1	Idler Spring
2	GD7318	1	Sleeve, 1" Long
3	G10201	1	Special Washer, ⅜" x 1 ½" O.D.
4	GD1026	1	Sleeve, 1 3/16" Long
5	GD11962	1	Idler
6	G11387	1	Flat Washer, 3/8" SAE
7	G10326	1	Hex Head Cap Screw, ⅜"-16 x 3¾"
8	G10108	1	Lock Nut, ⅜"-16

(RU87e/RU87a)

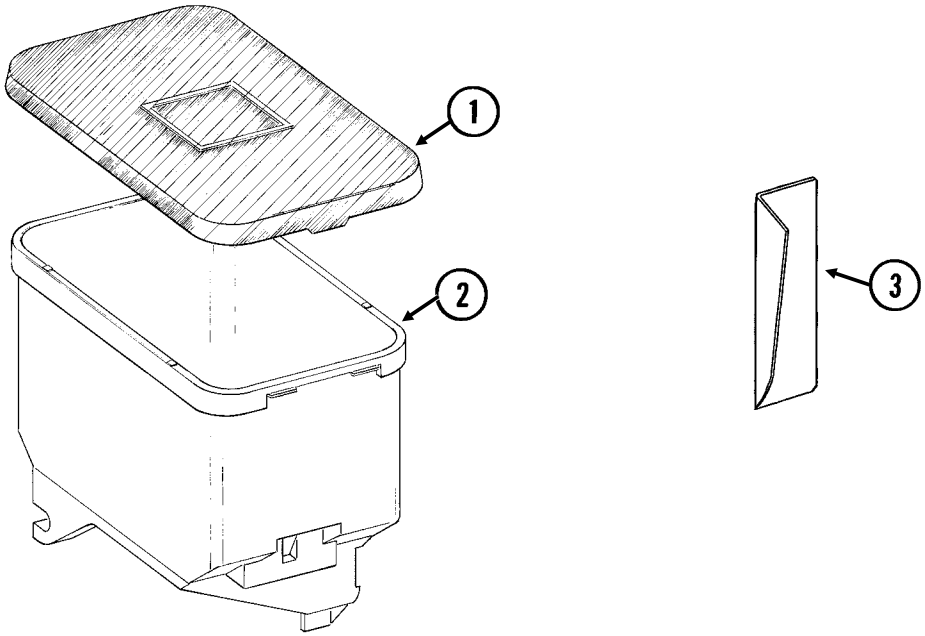

ITEM	PART NO.	QTY. (Per Row)	DESCRIPTION
1	GD11279	1	Lid
2	GA9714	1	Seed Hopper, Reinforced
	GD12561	-	Threaded Insert, 5/16"-18 (Included W/GA9714)
3	GD11747	1	Seed Reserve Baffle

RUA015/RUA056/RUA057(RU13k/RU13d)

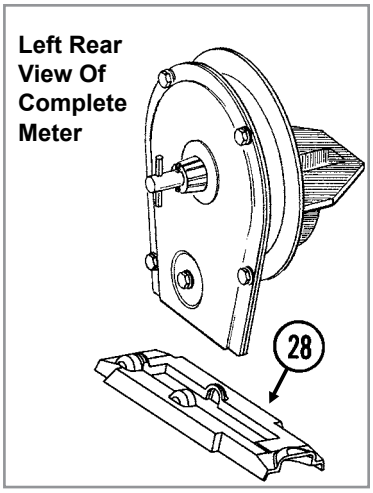

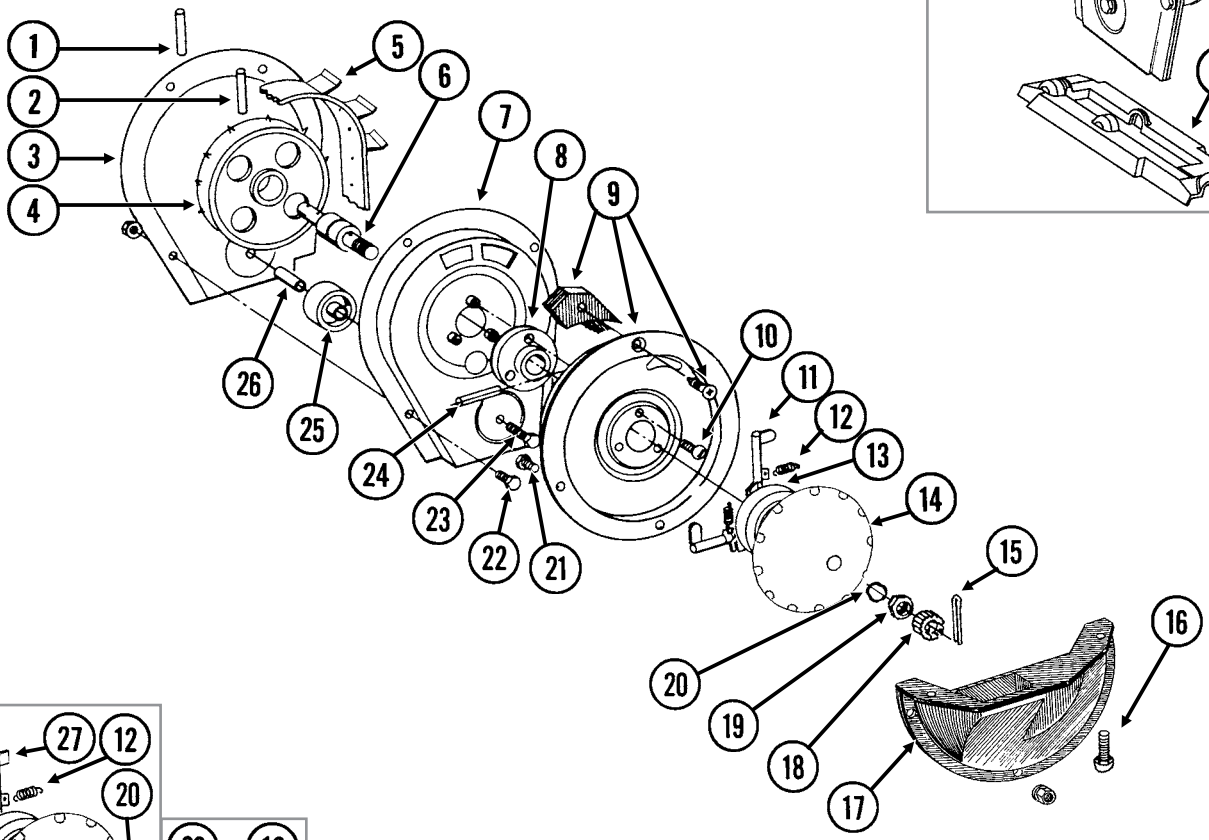

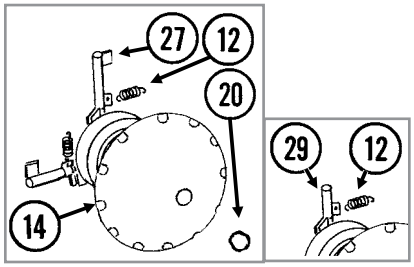

ITEM	PART NO.	QTY. (Per Row)	DESCRIPTION
1	G10602	1	Spring Pin, ¼" x 1½"
2	G10604	1	Spring Pin, 3⁄16" x 1½"
3	GD26419	1	Housing Cover
4	GD1041	1	Belt Drive Sprocket
5	GD11286	1	Seed Belt
6	GA2019	1	Bearing
7	GA18201	1	Conveyor Housing
8	GB0110	1	Bearing Housing
9	GR1569	-	Carrier Plate W/Brush and Screw (Corn)
	GR0664	-	Carrier Plate W/Brush and Screw (Sunflower)
	GA2020	-	Brush
	G10690	-	Rolling Thread Screw, No. 10 x ¾"
10	G10401	3	Slotted Hex Washer Head Screw, No. 10-32 x 5⁄8"
11	GD18704	12	Finger, Corn
12	GD19790	12	Spring
13	GB0410	1	Cam
14	GD11528	1	Finger Holder (Corn and Sunflower - Used With GR1848)
	GD26594	-	Finger Holder (Corn and Sunflower - Used With GR2154)
15	G10470	1	Cotter Pin, 5⁄32" x 1"
16	G11009	2	Locking Thumbscrew, 5⁄16"-18 x ¾"
17	GD36922	1	Seed Baffle
18	GD1083	1	Cover Nut
19	G10500	1	Jam Nut, 5⁄8"-18 UNF
20	GA8343	1	Wave Washer, 5⁄8" (Triple Wave)
21	G10020	3	Hex Head Cap Screw, ¼"-20 x 5⁄8"
	G10323	3	Hex Flange Nut, ¼"-20, No Serrations
22	G10022	4	Hex Head Cap Screw, ¼"-20 x ½"
	G10621	4	Serrated Flange Nut, ¼"-20
23	G10021	1	Hex Head Cap Screw, ¼"-20 x 1½"
	G10621	1	Serrated Flange Nut, ¼"-20
24	G10603	1	Spring Pin, ¼" x 1¼"
25	GD1042	1	Idler
26	GB0120	1	Bushing, 17⁄64" I.D. x 1 1⁄32" Long
27	GD19333	12	Finger, Oil Sunflower
28	GD15698	1	Shank Cover, Finger Pickup Seed Meter
29	GD11787	-	Half Rate Blank Finger
30	GB0410	-	Cam (Sunflower)

A	GR1848	-	Finger Assembly, Corn (Items 11-14 and 20)
B	GR2154	-	Finger Assembly, Sunflower (Items 12, 14, 20, 27, and 30)
C	700-01082	-	Corn Meter Assembly (Items 1-26 and 28)
D	900-01117	-	Sunflower Meter Assembly (Items 1-10, 12, 14-15, 17-27, and 30)

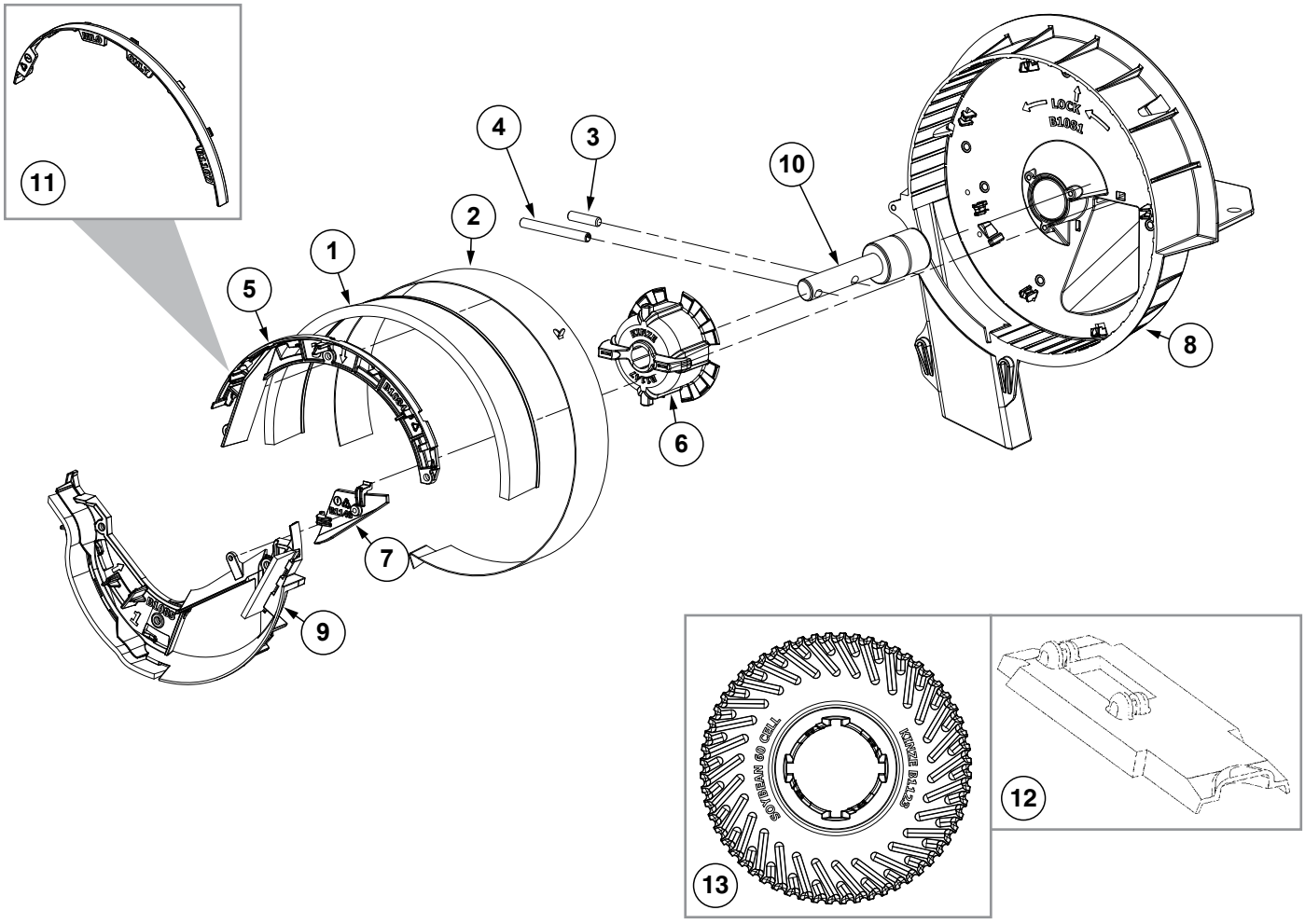
11
4
3
10
2
1
5
LOCK
8
6
7
9
12
13

ITEM	PART NO.	QTY. (Per Row)	DESCRIPTION
1	GA5699	1	Upper Brush
2	GD8778	1	Wear Strip
3	G11448	1	Pin, ¼" x 1"
4	G10475	1	Spring Pin, ¼" x 2¼"
5	GB1084	1	Upper Brush Retainer (Used W/Soybean and Wheat Discs)
6	GB1147	1	Disc Hub
7	GB1148	1	Lower Retainer Wall
8	GB1081	1	Brush Meter Housing
9	GA24956	1	Lower Brush Retainer Assembly
	GB1085	1	Lower Brush Retainer (Included W/GA24956)
	GD34021-02	1	Brush, 6" (Included W/GA24956)
	GD35784-01	1	Brush, 2" (Included W/GA24956)
10	GA5698	1	Bearing
11	GB1107	-	Upper Brush Retainer (Used W/Milo/Grain Sorghum Discs)
12	GD15699	1	Shank Cover, Brush-Type Seed Meter
13	GB1123		Seed Disc, Soybean, 60 Cell, Black Color-Coded
	GB1171		Seed Disc, Soybean, 54 Cell, Dark Gray Color-Coded
	GB1124		Seed Disc, Soybean, 48 Cell, Dark Blue Color-Coded
	GB1130		Seed Disc, Small Milo/Grain Sorghum, 30 Cell, Orange Color-Coded
	GB1131		Seed Disc, Large Milo/Grain Sorghum, 30 Cell, Light Blue Color-Coded
	GB1132		Seed Disc, High Rate Small Milo/Grain Sorghum, 60 Cell, Red Color-Coded
	GB1133		Seed Disc, Hight Rate Large Milo/Grain Sorghum, 60 Cell, Yellow Color-Coded
	GB1134		Seed Disc, Wheat, 54 Cell, Purple Color-Coded
A	700-01339	-	Brush Meter 2.0 (Items 1-11)

(A26319)

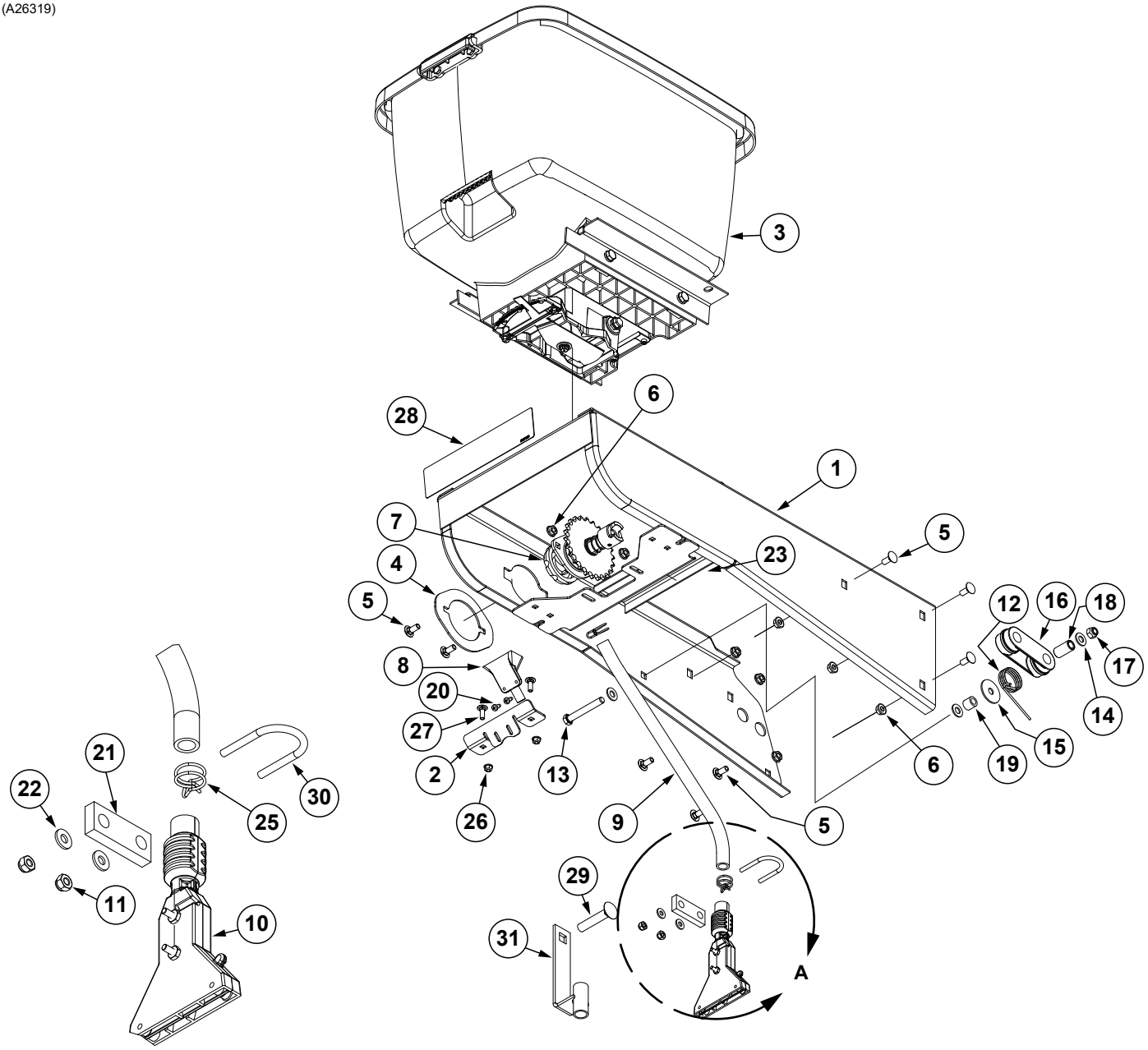

Detail A

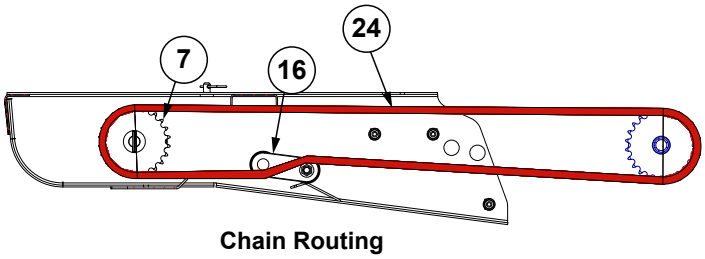

Chain Routing

ITEM	PART NO.	QTY. (Per Row)	DESCRIPTION
1	A26287	1	Hopper Panel Extension **(Non-Stock Item)**
2	GD36277	1	Funnel Bracket
3	---	-	See "Granular Chemical Hopper and Hopper Panel Extension" on page P23
4	GD11305	1	Plate
5	G10312	8	Carriage Bolt, 5/16"-18 x 3/4"
6	G10620	8	Serrated Flange Nut, 5/16"-18
7	---	1	See "Granular Chemical Meter and Meter Drive" on page P24
8	GD2423	1	Funnel
9	GD2947	1	Hose, 7/16" x 28"
10	GA6907 G10864 G10757 G10758	1 1 2 2	Slope-Compensating Bander W/Hardware (4½" Band Width) Uni-Clamp (Included W/GA6907) Pan Head Screw, No. 10-32 x 1¼" (Included W/GA6907) Hex Nut, No. 10-32 (Included W/GA6907)
11	G10110	2	Lock Nut, ¼"-20, Grade B
12	GD11219	1	Spring
13	G10325	1	Hex Head Cap Screw, 3/8"-16 x 2¾"
14	G11387	3	Flat Washer, 3/8" SAE
15	G10201	1	Special Washer, 3/8" x 1½" O.D.
16	GD11962	1	Idler
17	G10108	1	Lock Nut, 3/8"-16
18	GD1026	1	Sleeve, 1 3/16" Long
19	GD2971-10	1	Sleeve, 9/16" Long
20	G10966	2	Phillips Head Self-Tapping Screw, No. 10 x 1/2"
21	GD10984	1	Spacer
22	G11385	2	Flat Washer, ¼" SAE
23	G10670	2	Hair Pin Clip, No. 3
24	G3303-114 GR0196	1 1	Chain, No. 41, 114 Pitch Including Connector Link Connector Link, No. 41
25	G11209	2	Wire Hose Clamp, 3/4"
26	G10621	2	Serrated Flange Nut, ¼"-20
27	G10310	2	Carriage Bolt, ¼"-20 x ¾", Grade 2
28	---	-	See "Decals, Paint, and Miscellaneous" on page P111
29	G10315	1	Carriage Bolt, ½"-13 x 2½" (Replaces Existing ½" x 2¼" Hardware)
30	GD10963	1	U-Bolt, 1½" x 1 5/16" x ¼"-20
31	GA6741	1	Bracket (Straight Drop In-Furrow)

(METR14d)

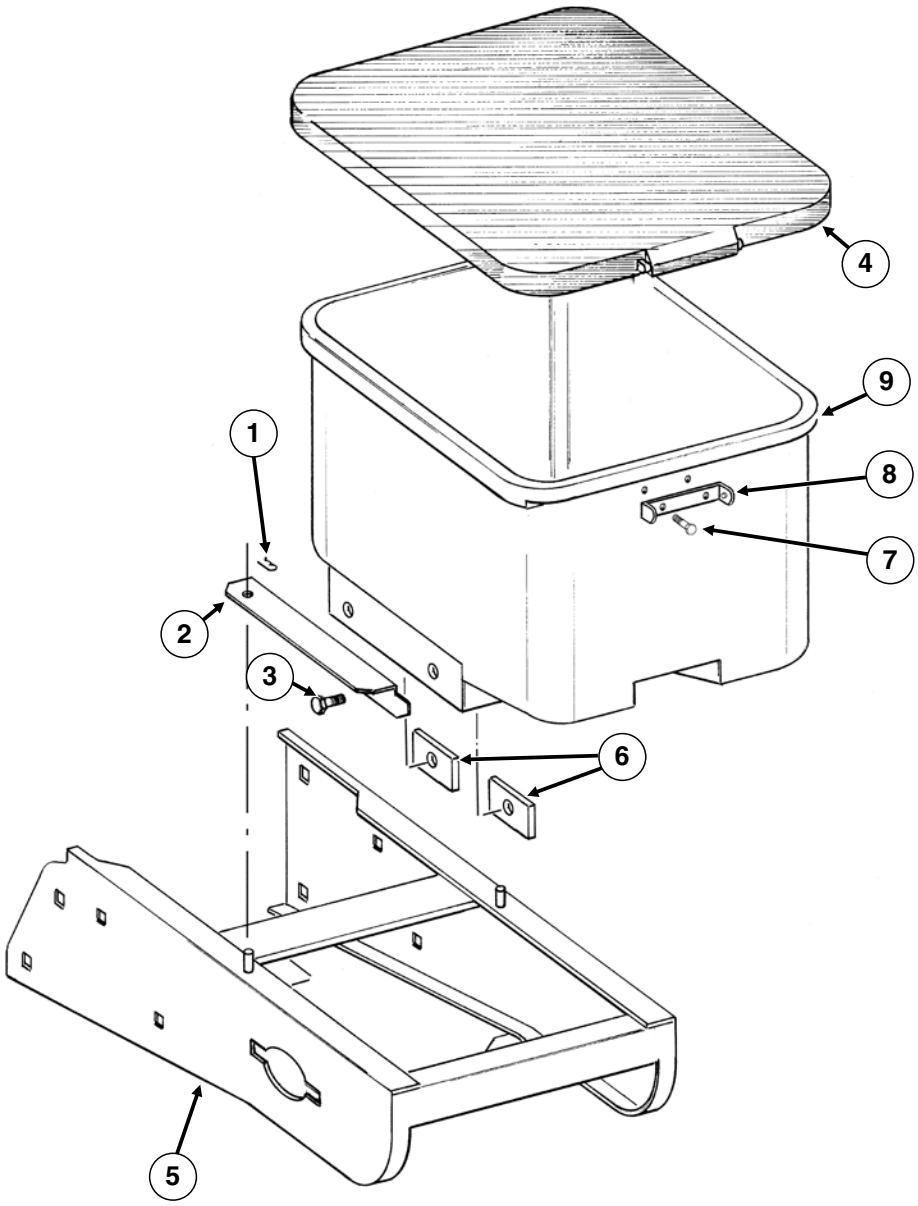

ITEM	PART NO.	QTY. (Per Row)	DESCRIPTION
1	G10670	2	Hair Pin Clip, No. 3
2	GD1059L GD1059R	1 1	Support, L.H. (Shown) Support, R.H.
3	G10002 G10229	4 4	Hex Head Cap Screw, ⅜"-16 x ¾" Lock Washer, ⅜"
4	GA4444	1	Lid
5	GA26287	1	Hopper Panel Extension **(Non-Stock Item)**
6	GD11424	4	Block
7	G10023 G10621	2 2	Hex Head Cap Screw, ¼"-20 x ¾" Serrated Flange Nut, ¼"-20
8	GD1060	1	Hinge
9	GA8371	1	Hopper

RUA051/RUB028(RU91a)

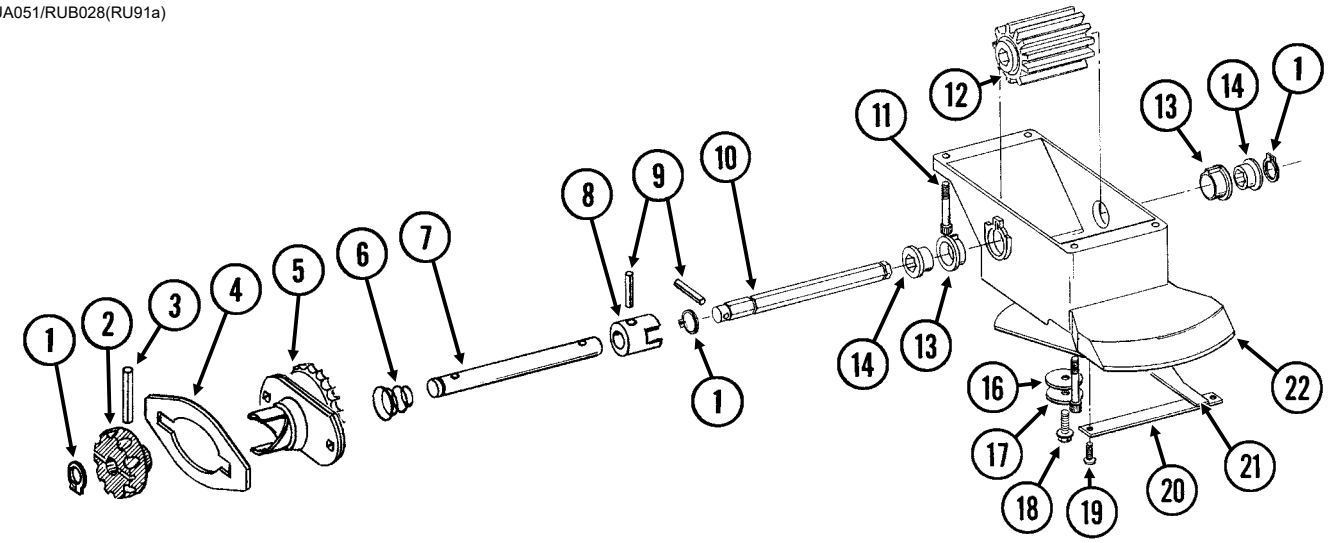

ITEM	PART NO.	QTY. (Per Row)	DESCRIPTION
1	G10567	3	External Retaining Ring, ⅝"
2	GD11239	1	Knob
3	G10602	1	Spring Pin, ¼" x 1½"
4	---	-	See "Granular Chemical Hopper and Hopper Panel Extension" on page P23
5	GA8364	1	Sprocket and Bearing, Drive Clutch, 24 Tooth
6	GD11413	1	Spring
7	GD11240	1	Shaft
8	GB0278	1	Coupler
9	G10546	2	Spring Pin, 3⁄16" x 1¼"
10	GD11297	1	Shaft
11	G11793	4	Hex Socket Head Cap Screw, No. 10-24 x ⅞"
12	GD7148	1	Feed Roller, Hex Bore
13	GB0115	2	Bearing
14	GD7258	2	Hex Bushing
15	---	-	---
16	G10660	1	Wave Washer, ½"
17	G11385	1	Flat Washer, ¼" SAE
18	G10570	1	Slotted Hex Self-Tapping Screw, ¼"-20 x ¾"
19	G11073	2	Slotted Hex Self-Tapping Screw, No. 10 x ⅜"
20	GD1061	1	Support Strap
21	GD1063	1	Metering Gate
22	GB0116	1	Granular Housing
A	GA8326	-	Granular Chemical Meter Complete (Items 1, 9, 10, 12-14 and 16-22)
B	GA8366	-	Granular Chemical Meter Clutch (Items 1-3 and 5-9)

(IP1279)

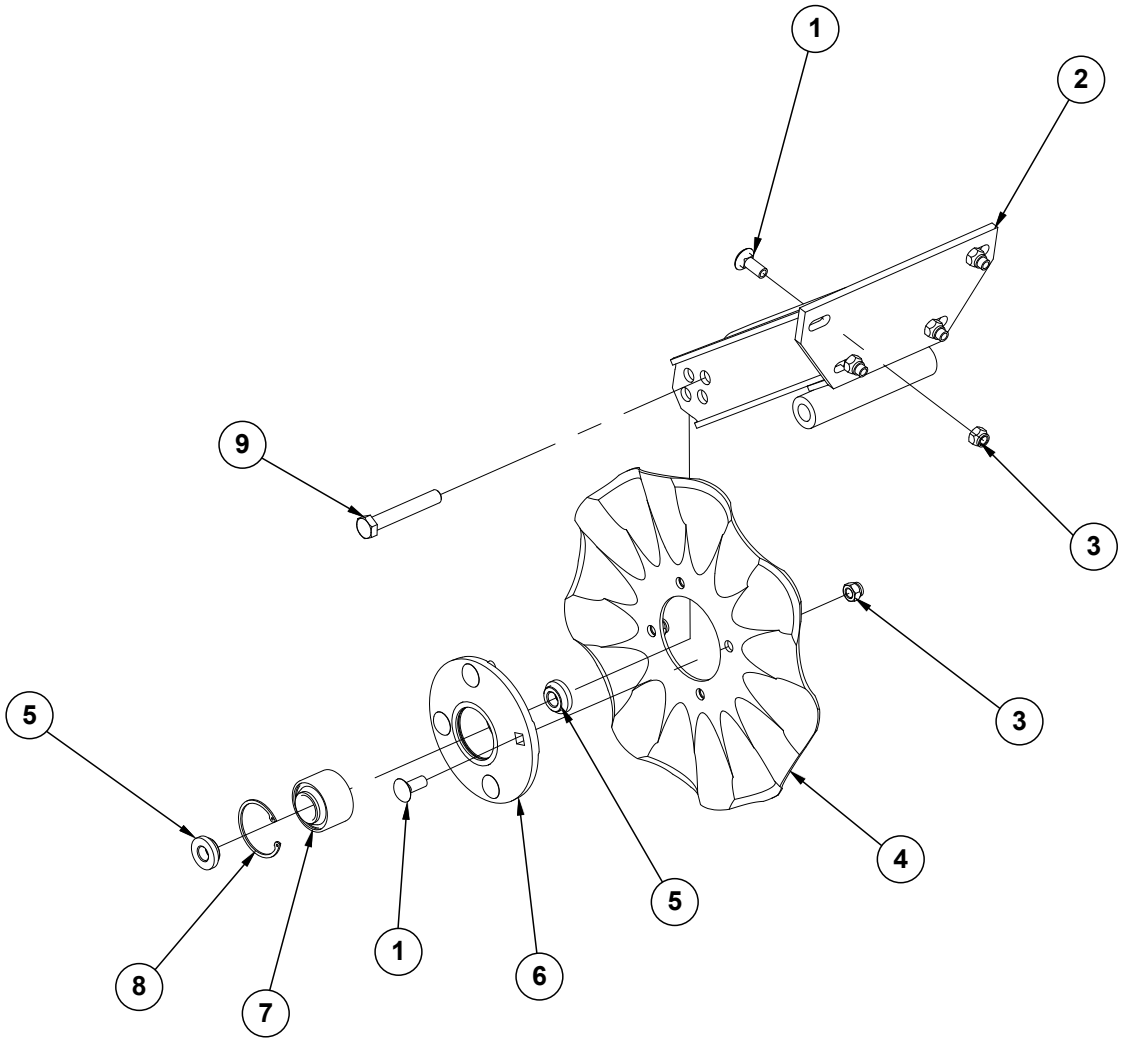

ITEM	PART NO.	QTY. (Per Row)	DESCRIPTION
1	G10636	8	**Carriage Bolt, ½"-13 x 1½"**
2	GA24239	1	Arm
3	G10111	8	Lock Nut, ½**"-13**
4	GD7803 GD7804 GD9254	1 - -	Disc Blade, Fluted, 1", 8 Flutes (Shown) Disc Blade, Bubbled, 1" Disc Blade, Fluted, ¾", 13 Flutes
5	GD11677	2	Adapter
6	GA8641	1	Hub W/Bearing And Retaining Ring (Includes items 7 and 8)
7	GA8603	1	Bearing, Double Row
8	GD19292	1	Retaining Ring (Square), 2⁷⁄₁₆**"**
9	G10036 G10107	1 1	Hex Head Cap Screw, ⅝**"**-11 x 4" Lock Nut, ⅝**"**-11

This page left blank intentionally.

(IP1468)

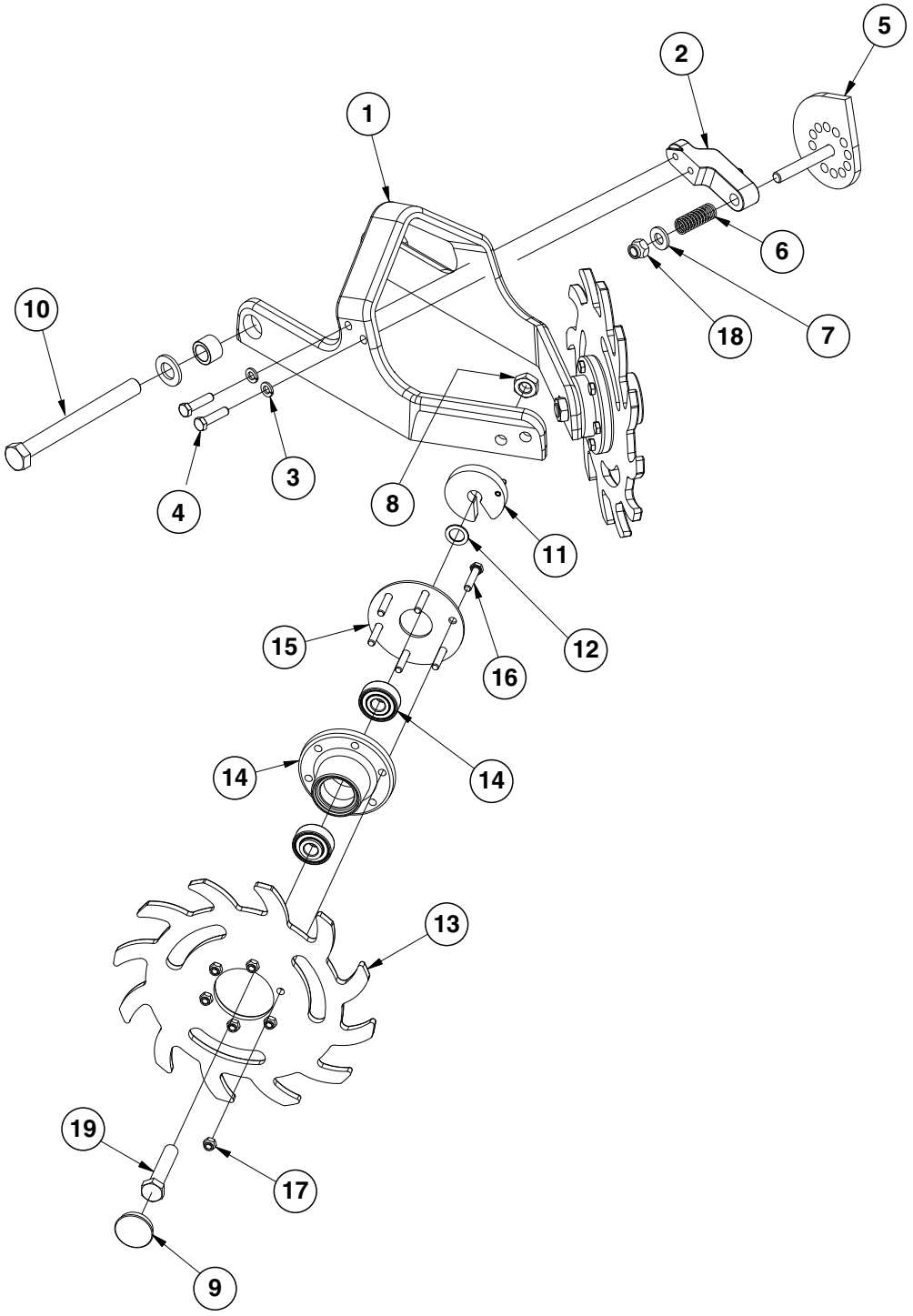

ITEM	PART NO.	QTY. (Per Row)	DESCRIPTION
1	GB0464	1	Residue Wheel Mount
2	GD26973	1	Cam Locking Pin
3	G10229	2	Lock Washer, ⅜"
4	G10004	2	Hex Head Cap Screw, ⅜"-16 x 1¼"
5	GA27038	1	Cam
6	GD10519	1	Spring
7	G11389	1	Flat Washer, ½" Plated SAE
8	G10503	2	Hex Jam Nut, ⅝"-11, Grade 2
9	GD1132	2	Dust Cap
10	G11236	1	Hex Head Cap Screw, ¾"-10 x 10½"
	G11392	2	Flat Washer, ¾" SAE
	GB0383	2	Bushing, 1⅛" O.D. x 25/32" I.D. x ¾" Long
	G11228	1	Lock Nut, ¾"-10
11	GA8760	2	Weed Guard W/Spring Pin
	G10765	-	Spring Pin, ¼" x 1" (Included W/GA8760)
12	GD30725	4	Machine Bushing, ⅝" (.030" Thick)
13	GB0387	2	Wheel, 12 Tine, ⅜" x 12"
14	GA5654	2	Hub W/Bearings
	GA2014	-	Bearing (Included W/GA5654)
15	GD9724	2	Backing Plate
16	G10133	12	Hex Head Cap Screw, 5/16"-18 x 1½"
17	G10109	12	Lock Nut, 5/16"-18, Grade 8
18	G10974	1	Lock Nut W/Nylon Insert, ½"-13
19	G10010	2	Hex Head Cap Screw, ⅝"-11 x 3"
A	GA12235	-	L.H. Residue Wheel (Items 13-17)
B	GA12236	-	R.H. Residue Wheel (Items 13-17)

NOTE: Push row units use the same seed tube, row unit depth adjustment components, quick adjustable down force springs, 15" opener disc blades, gauge wheels, closing wheels, meter drive and seed hopper as the pull row unit. See those pages for common parts.

See “Shank Assembly, Seed Tube, and Depth Adjustment” on page P3
See “Parallel Arms, Mounting Support Plate, and Quick Adjustable Down Force Springs” on page P5
See “15” Seed Opener Disc Blade/Bearing Assembly and Scrapers” on page P7
See “Gauge Wheels” on page P9
See ““V” Closing Wheels” on page P11
See “Hopper Support and Meter Drive” on page P13
See “Seed Hopper and Lid” on page P16

NOTE: Row unit assembly does not include the following: seed meter assembly, seed tube assembly, row unit hopper assembly, closing wheels, or seed meter clutch.

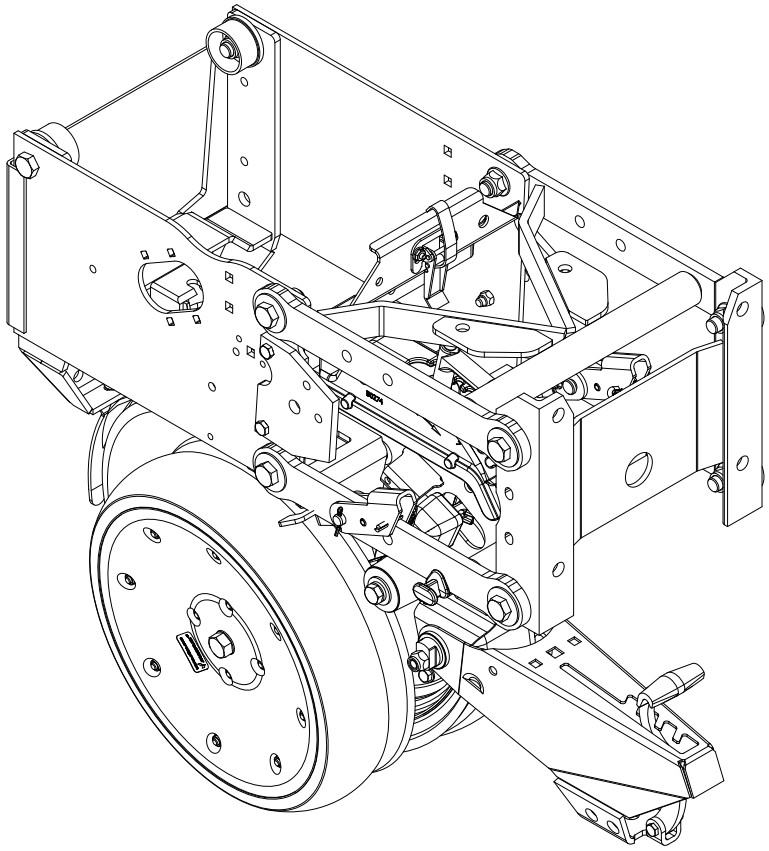

ITEM	PART NO.	QTY. (Per Row)	DESCRIPTION
1	G10504X	1	Push Row Unit Assembly

This page left blank intentionally.

NOTE: Push row units use the same seed tube, row unit depth adjustment components, quick adjustable down force springs, 15" opener disc blades, gauge wheels, closing wheels, meter drive and seed hopper as the pull row unit. See those pages for common parts.

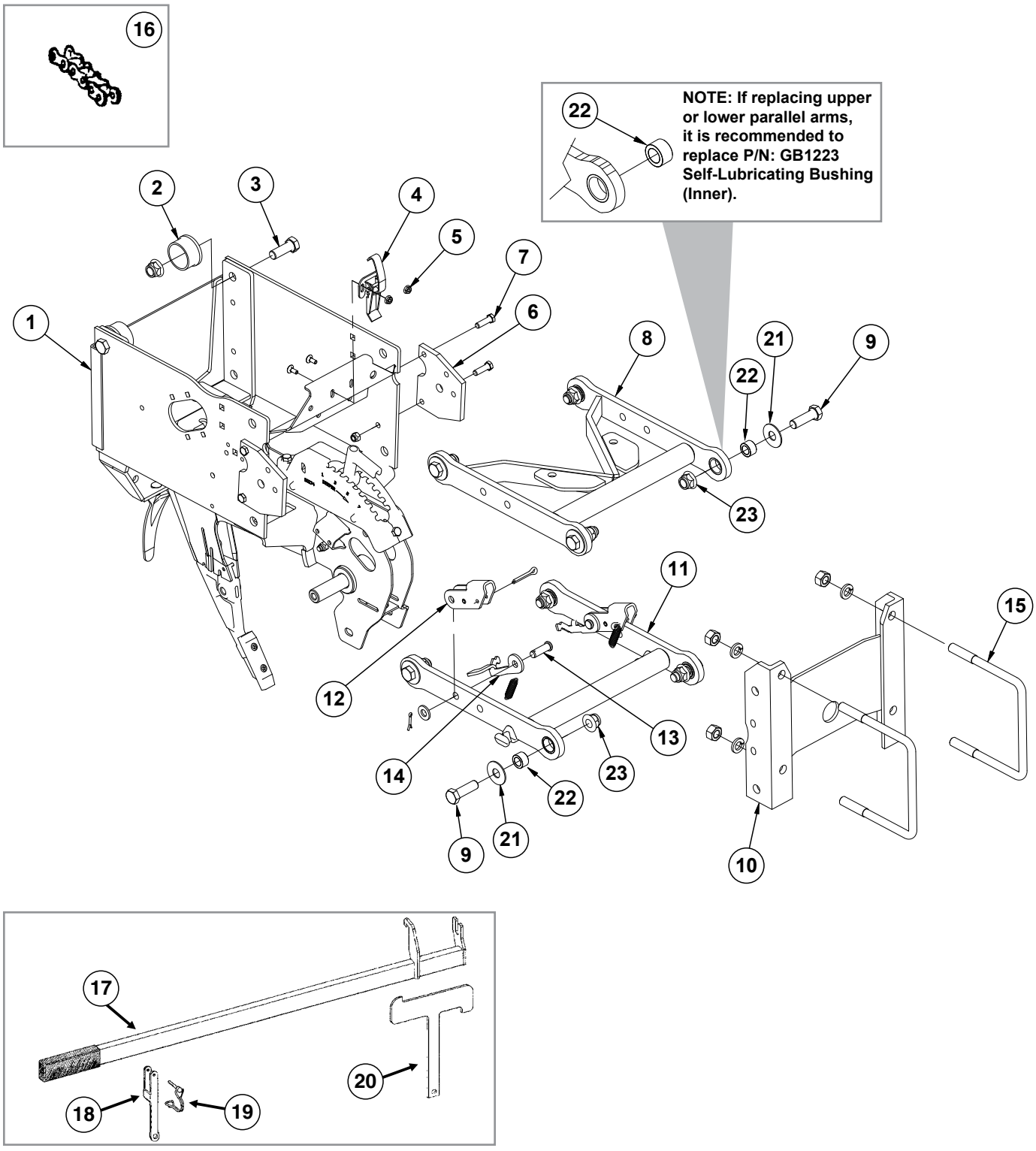

ITEM	PART NO.	QTY. (Per Row)	DESCRIPTION
1	---	1	See “Shank and Depth Adjustment (Split Row)” on page P33
2	GB0314	2	Hopper Mount
3	G10751 G11514	2 2	Hex Head Cap Screw, ⅝”-18 x 1¾” Lock Nut, ⅝”-18
4	GA2007	1	Hopper Hold Down Latch
5	G10621 G10309	2 2	Serrated Flange Nut, ¼”-20 Carriage Bolt, ¼”-20 x ⅝”, Grade 5
6	GD24545	2	Row Unit Stop
7	G10004 G10108	4 4	Hex Head Cap Screw, ⅜”-16 x 1¼” Lock Nut, ⅜”-16
8	G10011301 GB1224	1 -	Upper Parallel Arm Assembly Self-Lubricating Bushing (Included W/G10011301)
9	G10732	4	Hex Head Cap Screw, ⅝”-18 x 2”
10	GA11971	1	Mounting Plate
11	G10011401 GB1224	1 -	Lower Parallel Arm Assembly Self-Lubricating Bushing (Included W/G10011301)
12	GD11264 G10718 G10463 GD25569	1 2 2 2	Lockup Spring Pin, 5⁄16" x 1⅛" Cotter Pin, ¼” x 1½” Spring
13	G10284 G11389 G10451	2 2 2	Clevis Pin, ½” x 1½” Flat Washer, ½” Plated SAE Cotter Pin, ⅛” x 1”
14	GD25568 GD29459	1 1	Spring Mount Tab, L.H. Spring Mount Tab, R.H.
15	GD1113 GD1114 G10230 G10104	2 4 4	U-Bolt, 5” x 7” x ⅝”-11 U-Bolt, 7” x 7” x ⅝”-11 Lock Washer, ⅝” Hex Nut, ⅝”-11
16	G3303-96 GR0196	1 1	Chain, No. 41, 96 Pitch Including Connector Link Connector Link, No. 41
17	GA24889 GD11649	-	Lift Lever W/Boot Boot (Included W/GA24889)
18	GD35471	1	Bracket (Lift Lever)
19	GD9695	1	Wire Lock Pin, ¼" x 1¾"
20	GD35472	1	Mount
21	G11976	8	Flat Washer, ⅝” x 1¾”
22	GB1223	8	Self-Lubricating Bushing
23	G11514	8	Lock Nut, ⅝”-18
A	G1K534	-	Push Unit Lock-Up Kit, Items 6, and 12-14 (Includes GD24545 - Push Unit Stop)
B	G1K535	-	Push Unit Spring Lock-Up Kit, Items 12-14
C	G1K759	-	Push Row Unit Parallel Kit, Includes: (1) G10011301, (1) G10011401, (8) GB1223, (8) G11976, (2) G10732, (8) G11514, (6) G10751, (2) IS1066

(IP1585)

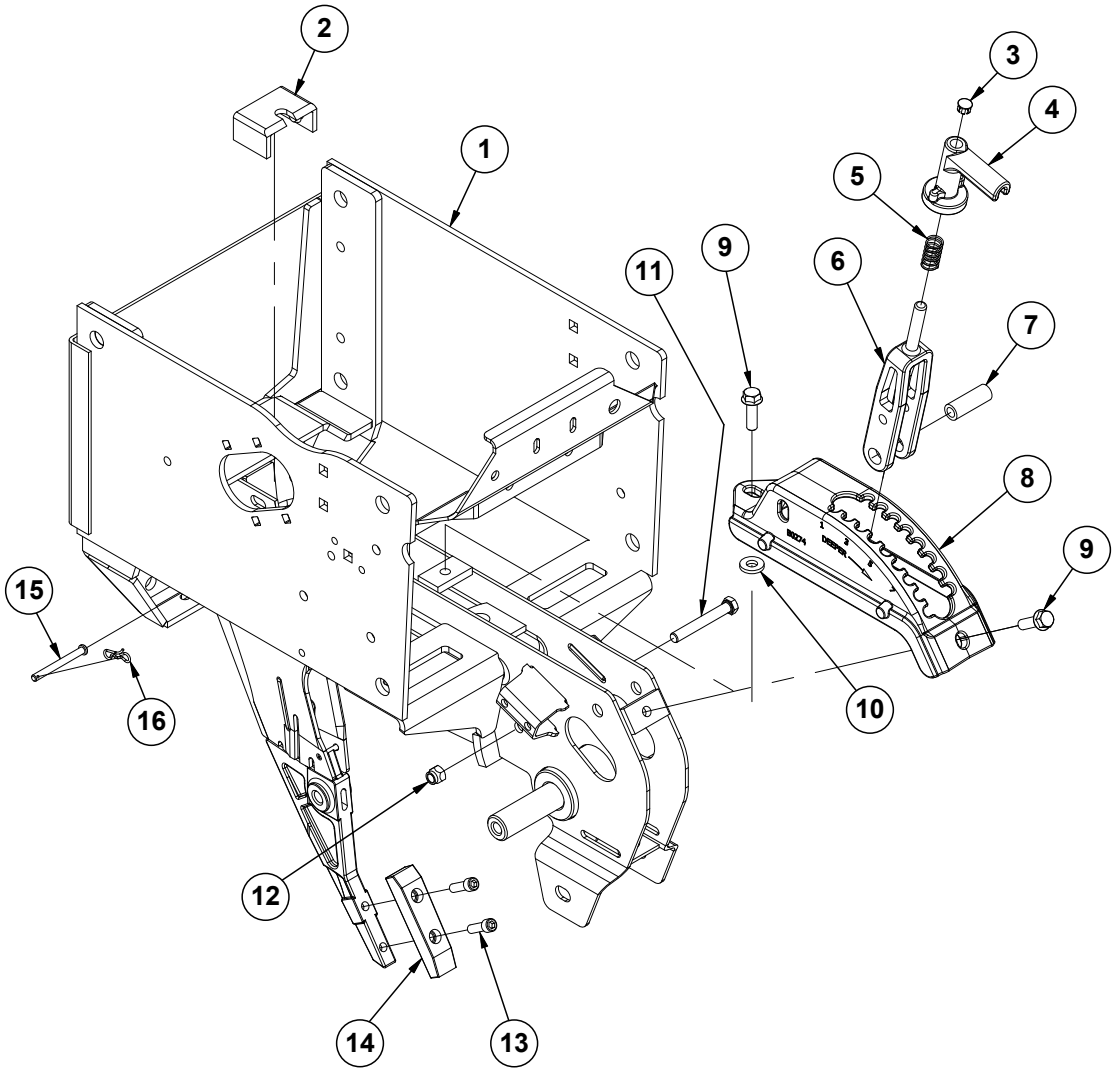

ITEM	PART NO.	QTY. (Per Row)	DESCRIPTION
1	GA26297	1	Push Row Unit Shank
2	GD16245	1	Sun Shade (Rubber)
3	GD3612	1	Cap Plug
4	GB0266	1	Handle, Depth Adjustment
5	GD10993	1	Spring
6	GB0267	1	Lever, Depth Adjustment
7	GD11259	1	Sleeve, 3/8" I.D. x 5/8" O.D. x 1 25/32" Long
8	GB0274	1	Cover, Depth Adjustment
9	G11015	2	Hex Washer Head Cap Screw, 3/8"-16 x 1 1/4"
10	G10207	1	Washer, 7/8" O.D. x 13/32" I.D. x .134"
11	G11592	1	Hex Head Cap Screw, 3/8"-24 x 2 3/4", Grade 8
12	G11591	1	Nylon Lock Nut, 3/8"-24, Grade C
13	G10912	2	Hex Socket Head Cap Screw, 5/16"-18 x 1", Grade 8
14	G10038601	1	Scraper
15	G10551	1	Clevis Pin, 1/4" x 2 1/2"
16	G10122301	1	Bow Tie Cotter Pin

(IP1586)

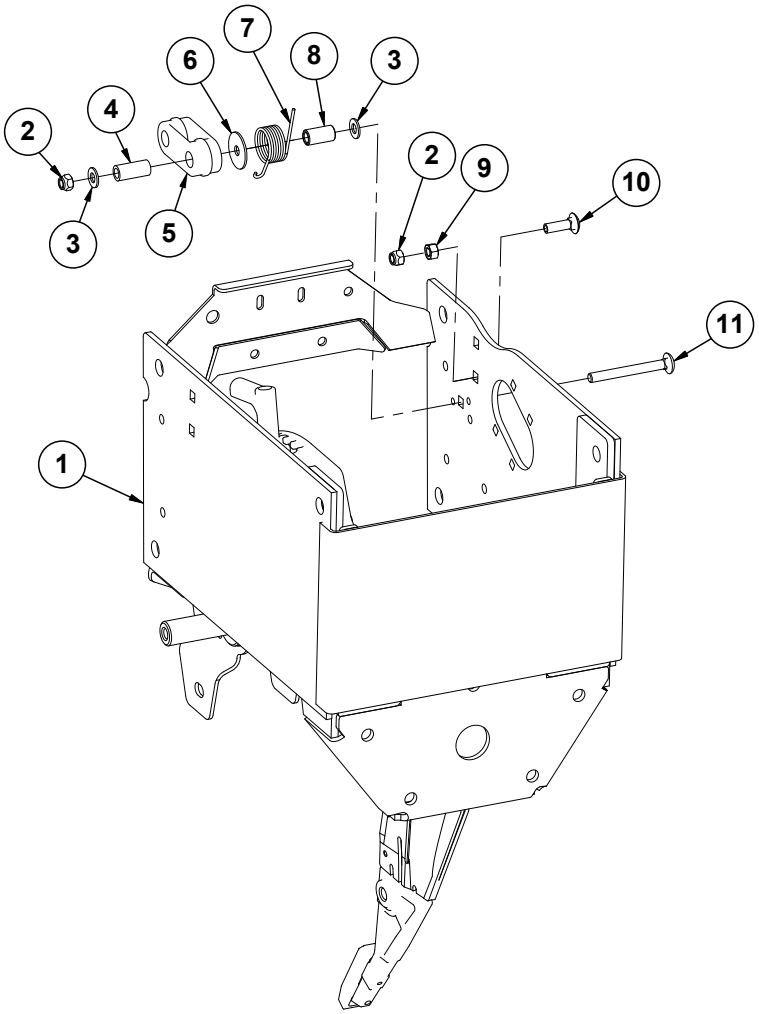

ITEM	PART NO.	QTY. (Per Row)	DESCRIPTION
1	---	1	See “Shank and Depth Adjustment (Split Row)” on page P33
2	G10108	2	Lock Nut, ⅜”-16
3	G11387	2	Flat Washer, ⅜” SAE
4	GD8893-01	1	Sleeve, 1⅜” Long
5	GB0968	1	Idler
6	G10201	1	Special Washer, ⅜” x 1½” O.D.
7	GD11218	1	Spring
8	GD1026	1	Sleeve, 1⅜₁₆” Long
9	G10101	1	Hex Nut, ⅜”-16
10	G10599	1	Carriage Bolt, ⅜”-16 x 1¼”
11	G10307	1	Carriage Bolt, ⅜”-16 x 3½”

PTD093(PT75e)

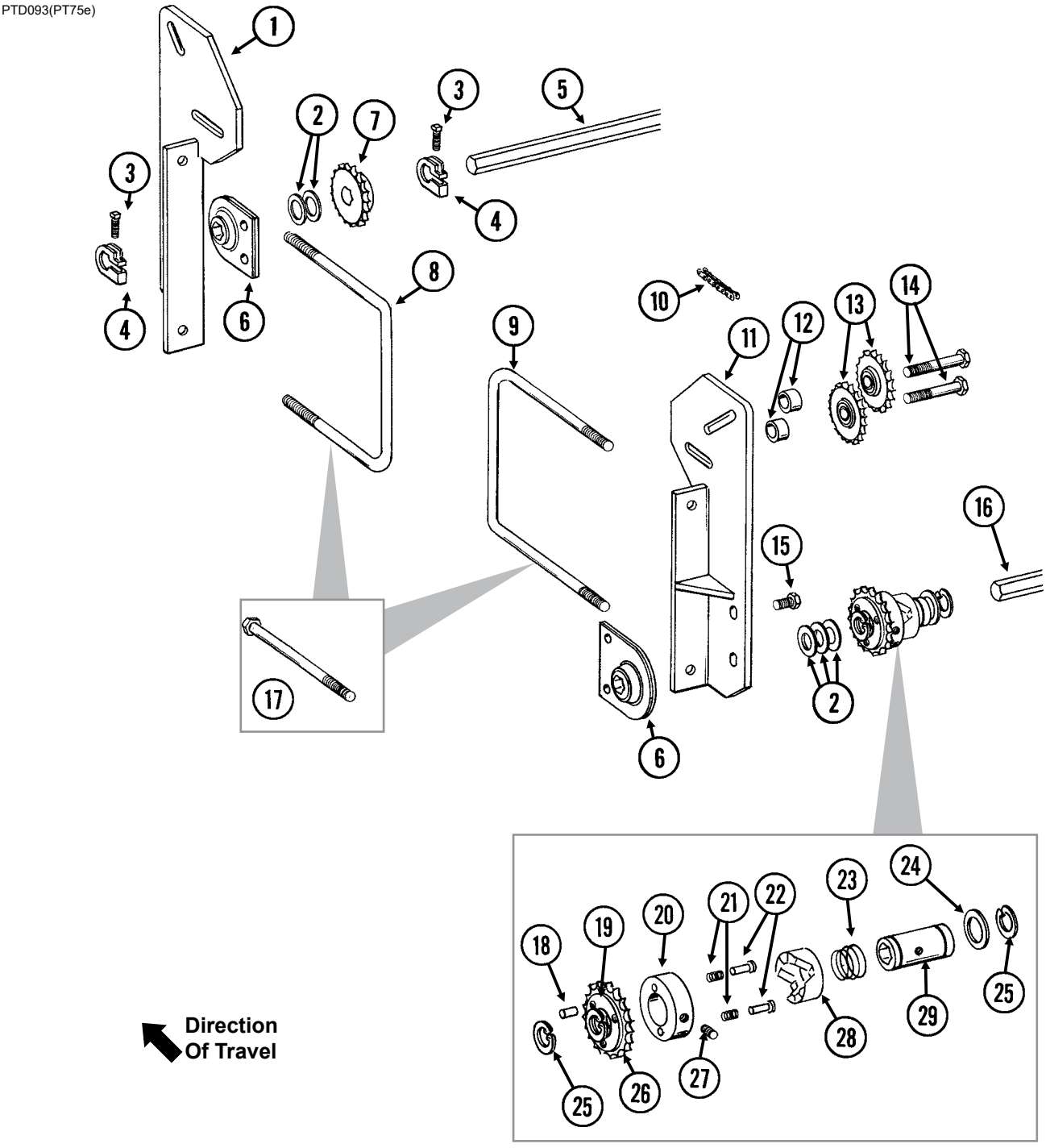

ITEM	PART NO.	QTY.	DESCRIPTION
1	GA8717	1	Front Mount
2	G10233	5	Machine Bushing, 1", 10 Gauge
3	G10130 G10923	2 2	Square Head Machine Bolt, 5/16"-18 x 1¾" Flange Nut, 5/16"-18, No Serration
4	GD11045	2	Lock Clamp
5	GD0914-84 GD0914-144 GD0914-205	1 - -	Hex Shaft, ⅞" x 84" (No Holes), 4 Row 30" Hex Shaft, ⅞" x 144" (No Holes), 6 Row 30" Hex Shaft, ⅞" x 205" (No Holes), 8 Row 30"
6	GA2180	2	Hanger Bearing, ⅞" Hex Bore
7	GA5107	1	Sprocket, 19 Tooth
8	GD11721 G10228 G10102	1 2 2	U-Bolt, 5" x 7" x ½"-13 (Double Frame Planters) Lock Washer, ½" Hex Nut, ½"-13
9	GD7145 G10228 G10102	1 2 2	U-Bolt, 7" x 7" x ½"-13 (Double Frame Planters) Lock Washer, ½" Hex Nut, ½"-13
10	G3310-138 G3310-252 GR0912	1 - -	Chain, No. 40, 138 Pitch Including Connector Link (Single Frame Planters) Chain, No. 40, 252 Pitch Including Connector Link (Double Frame Planters) Connector Link, No. 40
11	GA8716	1	Rear Mount
12	GD9229	4	Spacer, 1¼" O.D. x ½" Long
13	GA7154	4	Sprocket W/Bearing, 18 Tooth
14	G10581 G10168 G10228 G10102	4 4 4 4	Hex Head Cap Screw, ½"-13 x 2¼" Machine Bushing, ½", 7 Gauge Lock Washer, ½" Hex Nut, ½"-13
15	G10001 G10229 G10101	- - -	Hex Head Cap Screw, ⅜"-16 x 1" Lock Washer, ⅜" Hex Nut, ⅜"-16
16	---	-	See “Driveline, 4 Row 30”” on page P49 See “Driveline, 6 Row 30” and 8 Row 30”” on page P50
17	G10909 G10228 G10102	2 2 2	Hex Head Cap Screw, ½"-13 x 9" (Single Frame Planters) Lock Washer, ½" Hex Nut, ½"-13
18	G10968	1	Spring Pin, 5/32" x 7/16"
19	GR1406	1	Bushing
20	GR1405	1	Lock Collar
21	GR1413	2	Spring
22	GR1410	2	Pin
23	GR1408	1	Compression Spring
24	GR1411	1	Shim
25	G10496	2	External Inverted Snap Ring, 1½"
26	GR1412	1	Sprocket, 19 Tooth
27	G10535	1	Hex Socket Set Screw, ⅜"-16 x ¾"
28	GR1409	1	Knurled Collar
29	GR1407	1	Drive Shaft
A	GA8092	-	Clutch Sprocket Assembly, 19 Tooth (Items 18-29)
B	GA11331	-	Hex Lock Clamp Assembly (Items 3 and 4)
C	G1K331	-	Clutch Sprocket Kit (Items 18, 19 and 26)

(PT73d)

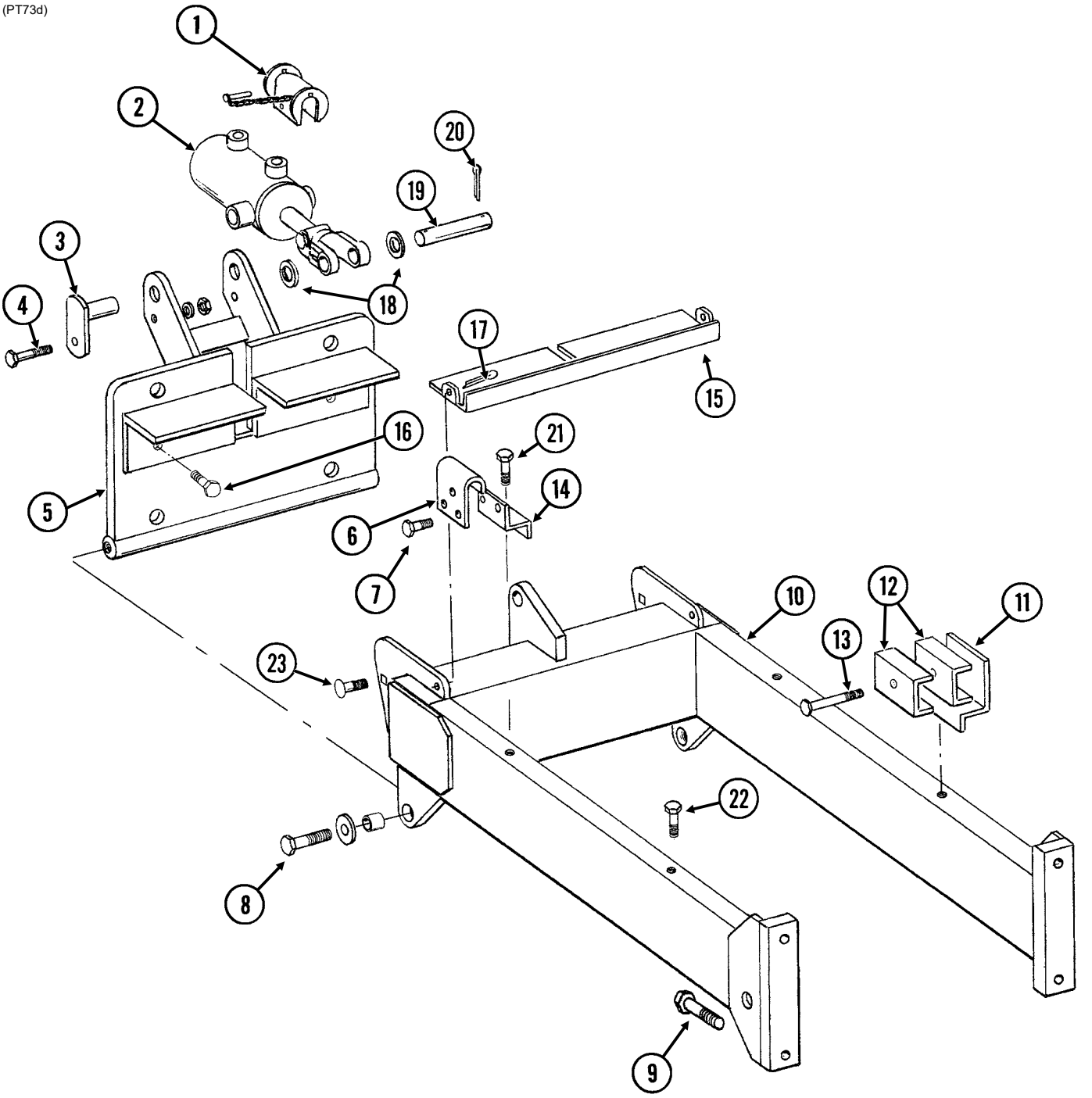

ITEM	PART NO.	QTY.	DESCRIPTION
1	GA9872	1	Lockup W/Pin
2	---	-	See “Split Row Lift Cylinder” on page P68
3	GA6761	2	Pin
4	G10581 G11389 G10111	2 2 2	Hex Head Cap Screw, ½"-13 x 2¼" Flat Washer, ½" SAE Lock Nut, ½"-13
5	GA8487	1	Hinge
6	GD7944	1	Mount
7	G10001 G10229 G10101	2 2 2	Hex Head Cap Screw, ⅜"-16 x 1" Lock Washer, ⅜" Hex Nut, ⅜"-16
8	G10645 G11394 GD11535	2 2 2	Hex Head Cap Screw, 1"-8 x 3", Grade 8 Flat Washer, 1" SAE Bushing, 1½" O.D.
9	---	-	See “Hitch and Frame Assembly/Safety Chain” on page P41
10	GA8488 G10640	1 -	Hitch Extension W/Grease Fittings, 4 Row 30", 6 Row 30" and 8 Row 30" Grease Fitting, ¼"-28 (Included W/GA8488)
11	GD11657	2	Mount
12	GD6027	4	Hose Clamp, ¾" x 2 ½" x 2½"
13	G10325 G10108	2 2	Hex Head Cap Screw, ⅜"-16 x 2¾" Lock Nut, ⅜"-16
14	GD11662	1	Mounting Bracket
15	GA8676	1	Shield
16	G10428	2	Hex Head Cap Screw, ⅝"-11 x ¾"
17	G10451	2	Cotter Pin, ⅛" x 1"
18	G11396	2	Flat Washer, 1¼" SAE
19	GD11559	1	Pin, 1¼" x 4⅞"
20	G10460	2	Cotter Pin, ¼" x 2"
21	G10001 G10229 G11387	3 3 3	Hex Head Cap Screw, ⅜"-16 x 1" Lock Washer, ⅜" Flat Washer, ⅜" SAE
22	G10001	1	Hex Head Cap Screw, ⅜"-16 x 1"
23	G10574 G11389 G10111	2 2 2	Carriage Bolt, ½"-13 x 1¼" Flat Washer, ½" SAE Lock Nut, ½"-13

This page left blank intentionally.

(A13595/PT1j)

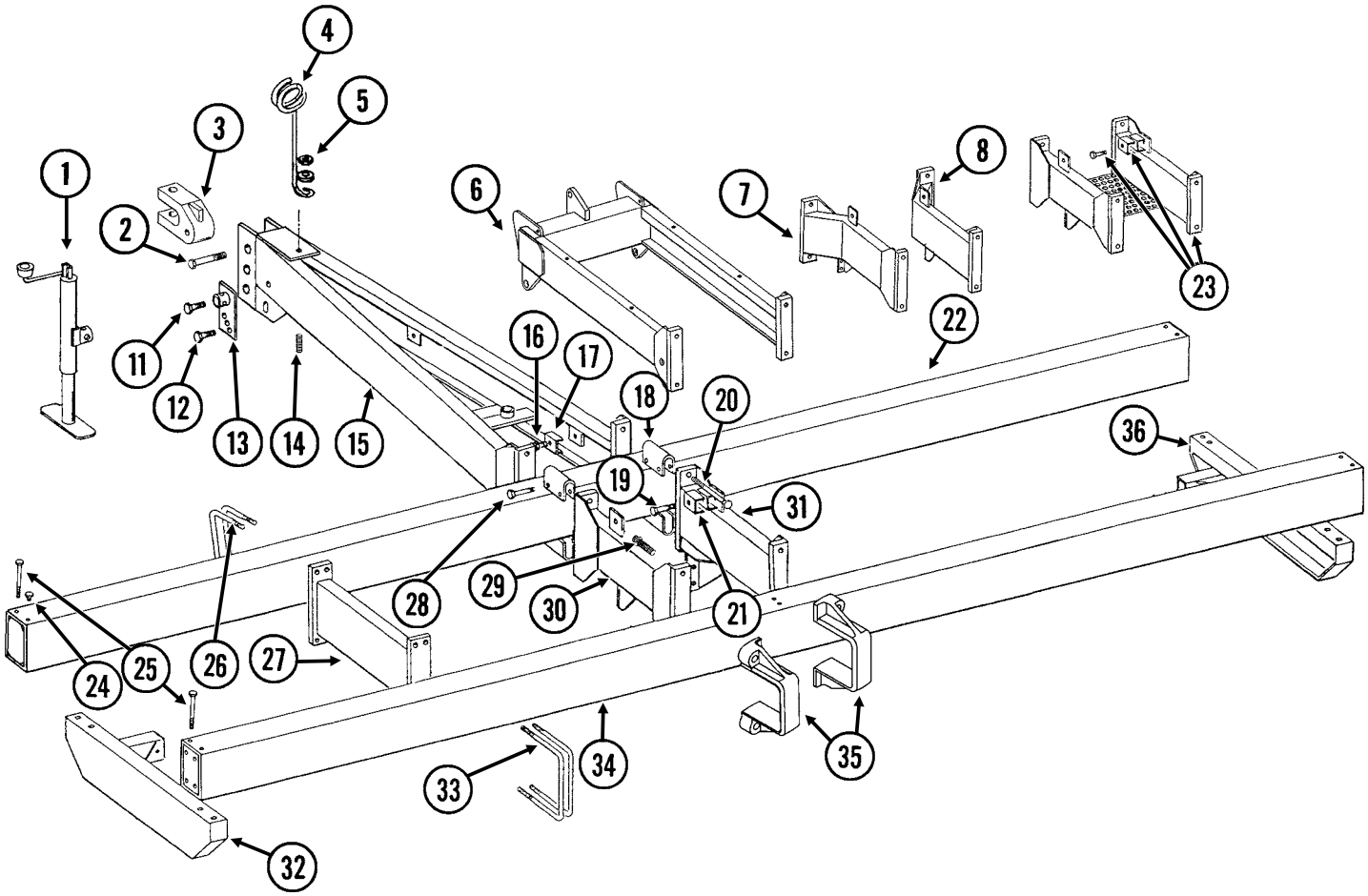

ITEM	PART NO.	QTY.	DESCRIPTION
1	G4100-02	1	Jack Assembly
	GR0255	-	Repair Kit (Chain and Pin)
2	G10169	1	Hex Head Cap Screw, 1¼"-7 x 6"
	G10157	1	Lock Nut, 1¼"-7
3	GB0156	1	Clevis
4	GD7140	1	Hose Holder
5	G10348	1	Hex Head Cap Screw, ½"-13 x 5"
	G11389	1	Flat Washer, ½" SAE
	G10228	1	Lock Washer, ½"
	G10102	1	Hex Nut, ½"-13
6	---	-	See “Split Row Self-Leveling Hitch Extension” on page P38
7	GA9429	-	Center Extension, L.H., Offset, 24"
8	GA9428	-	Center Extension, R.H., Offset, 24"
9	---	-	---
10	---	-	---

ITEM	PART NO.	QTY.	DESCRIPTION
11	G10005	1	Hex Head Cap Screw, ⅝"-11 x 1¾"
	G10107	1	Lock Nut, ⅝"-11
12	G10017	1	Hex Head Cap Screw, ½"-13 x 1½"
	G11389	1	Washer, ½" SAE
	G10111	1	Lock Nut, ½"-13
13	GA7909	1	Jack Adjustment Bracket
14	GD5888	1	Spring
15	GA8670	1	Hitch
16	G10048	2	Hex Head Cap Screw, ⅜"-16 x 2"
	G10108	2	Lock Nut, ⅜"-16
17	GD5875	2	Hose Clamp
18	GA5197	-	Spacer
19	G10048	-	Hex Head Cap Screw, ⅜"-16 x 2"
	G10108	-	Lock Nut, ⅜"-16
20	G10993	4	Hex Head Cap Screw, 1"-8 x 8½", Grade 8
	G10647	4	Hex Nut, 1"-8, Grade 8
21	GD6027	-	Hose Clamp, ¾" x 2 ½" x 2½"
22	A8011	1	Double Frame Toolbar, 7" x 5" x 120", 4 Row 30" **(Non-Stock Item)**
	A8013	-	Double Frame Toolbar, 7" x 5" x 180", 6 Row 30" **(Non-Stock Item)**
	A8015	-	Double Frame Toolbar, 7" x 5" x 240", 8 Row 30" **(Non-Stock Item)**
23	GA9007	-	Hitch Extension W/Hose Clamps and Hardware
	GD6027	-	Hose Clamp, ¾" x 2 ½" x 2½" (Included W/GA9007)
	G10048	-	Hex Head Cap Screw, ⅜"-16 x 2" (Included W/GA9007)
	G10108	-	Lock Nut, ⅜"-16 (Included W/GA9007)
24	G10903	-	Cap Plug
25	G10895	8	Hex Head Cap Screw, ¾"-10 x 8½"
	G10112	8	Lock Nut, ¾"-10
26	GD1113	-	U-Bolt, 5" x 7" x ⅝"-11
	G10230	-	Lock Washer, ⅝"
	G10104	-	Hex Nut, ⅝"-11
27	GA4265	-	Straight Extension
28	G10061	4	Hex Head Cap Screw, ⅜"-16 x 3½"
	G11387	4	Flat Washer, ⅜" SAE
	G10108	4	Lock Nut, ⅜"-16
29	G11085	4	Flanged Cap Screw, 12 Point, 1"-14 x 3"
30	GA9427	-	Hitch/Center Extension, L.H., Straight, 24"
31	GA9426	-	Hitch/Center Extension, R.H., Straight, 24"
32	GA9439	-	End Extension, L.H.
33	GD1114	-	U-Bolt, 7" x 7" x ⅝"-11
	G10230	-	Lock Washer, ⅝"
	G10104	-	Hex Nut, ⅝"-11
34	A8016	1	Toolbar, 7" x 7" x 120", 4 Row 30" **(Non-Stock Item)**
	A8018	-	Toolbar, 7" x 7" x 180", 6 Row 30" **(Non-Stock Item)**
	A8020	-	Toolbar, 7" x 7" x 240", 8 Row 30" **(Non-Stock Item)**
35	GD29221	2	Hitch Clamp
36	GA9438	-	End Extension, R.H.

(PT2j)

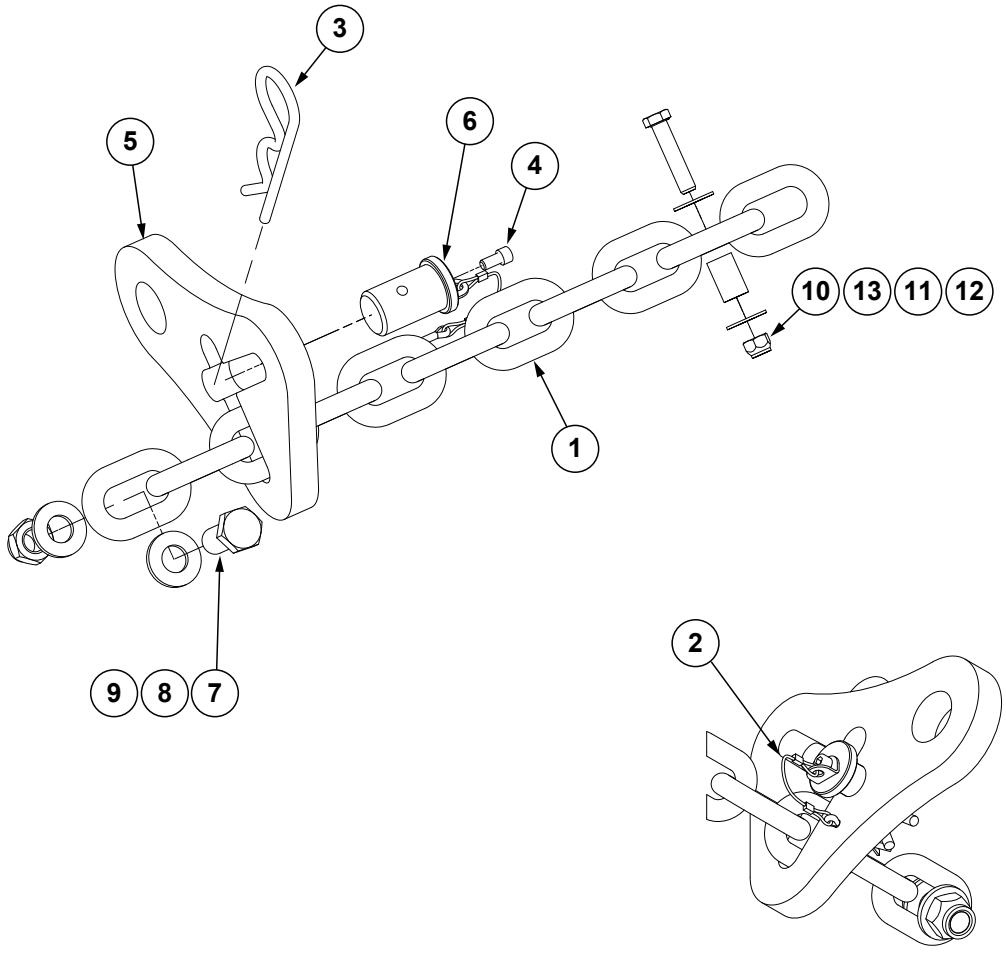

ITEM	PART NO.	QTY.	DESCRIPTION
1	G3324-01	1	Safety Chain, 13MM Grade 70, 97½"
2	GD35339	1	Looped Tether W/Tabs and Cotter Pin
3	G10671	1	Hairpin Cotter, 3⁄16" x 3¼"
4	G11874	1	Hex Socket Head Cap Screw, ¼"-20 x ½"
5	GD35127	1	Single Chain Latch
6	GD35340	1	Chain Latch Pin
7	G10007	1	Hex Head Cap Screw, 5⁄8"-11 x 1½"
8	G11391	2	Flat Washer, 5⁄8" SAE
9	G10107	1	Lock Nut, 5⁄8"-11
10	G10108	1	Lock Nut, 3⁄8"-16
11	GD8893-07	1	Sleeve, 1" Long
12	G10047	1	Hex Head Cap Screw, 3⁄8"-16 x 1¾"
13	G10210	2	Washer, 3⁄8" USS
A	G9948X	-	3⁄8" Transport Safety Chain Package (Items 1-13)

(IP1313)

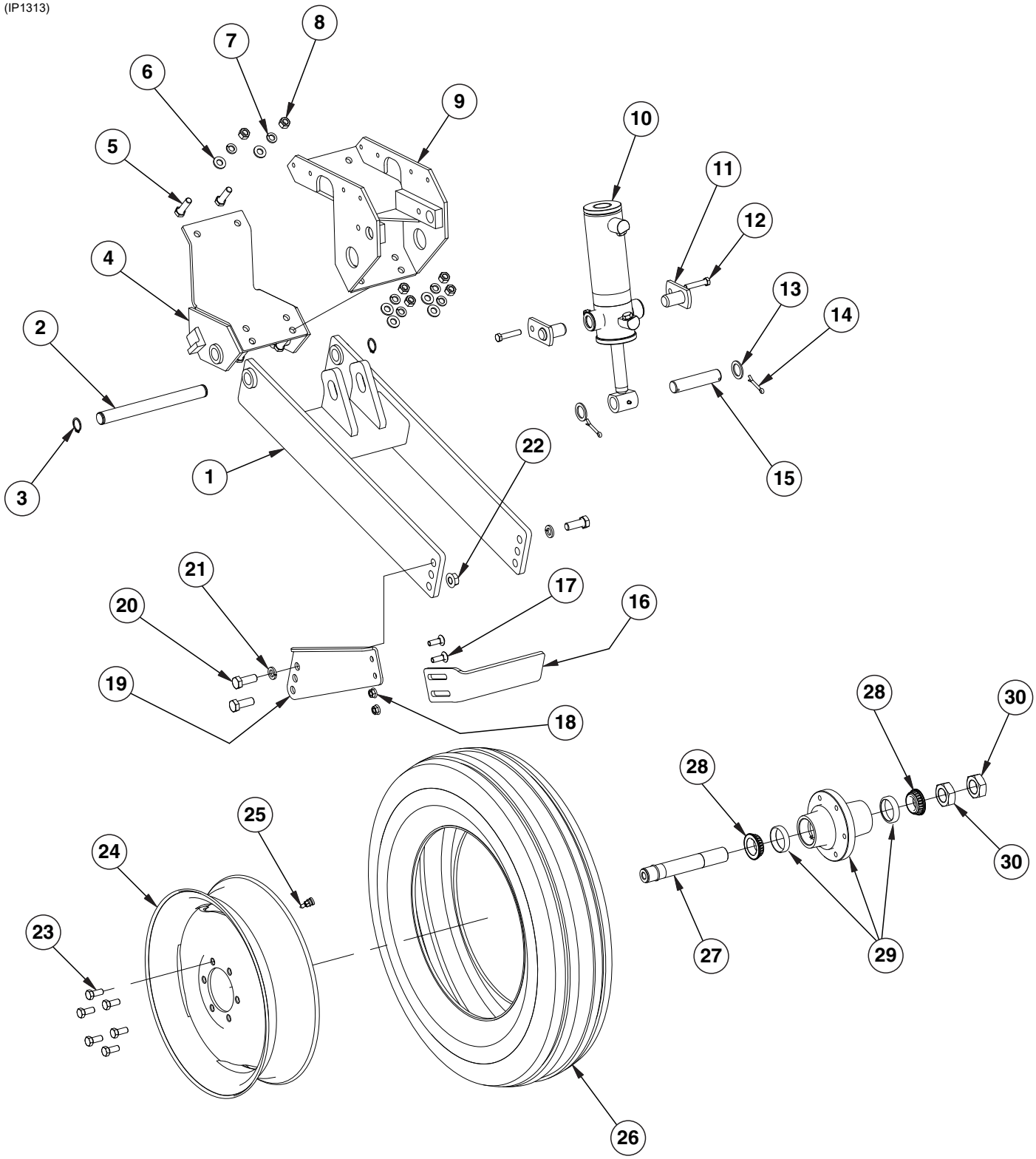
1
2
3
4
5
6
7
8
9
10
11
12
13
14
15
16
17
18
19
20
21
22
23
24
25
26
27
28
28
29
30
30

ITEM	PART NO.	QTY. (Per Assy.)	DESCRIPTION
1	GA14349	1	Wheel Module
2	GD20461	1	Pin, 1¼" x 13"
3	G11400	2	Retaining Ring, 1¼"
4	GA14348	1	Lower Half Clamp
5	G10006	6	Hex Head Cap Screw, ⅝"-11 x 2¼"
6	G11391	6	Flat Washer, ⅝" SAE
7	G10230	6	Lock Washer, ⅝"
8	G10104	6	Hex Nut, ⅝"-11
9	GA5122	1	Wheel Tower Clamp
10	---	1	See “Master Lift Cylinder” on page P63 See “Contact Wheel and Arm Assembly” on page P47
11	GA5121	2	Pin, 2⅛"
12	G10053 G10111	2 2	Hex Head Cap Screw, ½"-13 x 2 ½" Lock Nut, ½"-13
13	G10159	4	Washer, 1⅞"
14	G10460	2	Cotter Pin, ¼" x 2"
15	GD5841	1	Pin, 1¼" x 5⅝"
16	GD34178	1	Slotted Scrapper
17	G10636	2	Carriage Bolt, ½"-13 x 1½"
18	G10071	2	Serrated Flange Nut, ½"-13
19	GD20456	1	Short Scraper Arm
20	G10026	3	Hex Head Cap Screw, ¾"-10 x 2"
21	G10231	2	Lock Washer, ¾"
22	G11314	1	Serrated Flange Nut, ¾"-10
23	GR0270	6	Lug Bolt, ⁹⁄₁₆"-18
24	GA14413	1	Rim, 5.50" x 20"
25	GA7434	1	Valve Stem
26	GD13401	1	Tire, 7.50" x 20", 8 Ply, Tubeless W/O Center Rib (Specify Brand*)
27	GA4376 GD11490 GD11458	1 1 1	Spindle Assembly Round External Retaining Ring (Included W/GA4376) Spindle (Included W/GA4376)
28	GA24825	2	Bearing
29	GA24826 GR0434	1 2	Hub W/Cups, 6 Bolt Cup (Included W/GA24826)
30	G11081	2	Hex Jam Nut, 1½"-12, Grade 2
A	GA24828	1	Hub and Spindle Assembly (Items 27-30)
C	GA14412	1	Tire and Rim Assembly (Items 24-26) (Specify Brand*)

*** Specific brand requests will be supplied only as available from current Kinze Repair Parts stock. If a specific brand requested is not in stock, the brand available will be supplied.**

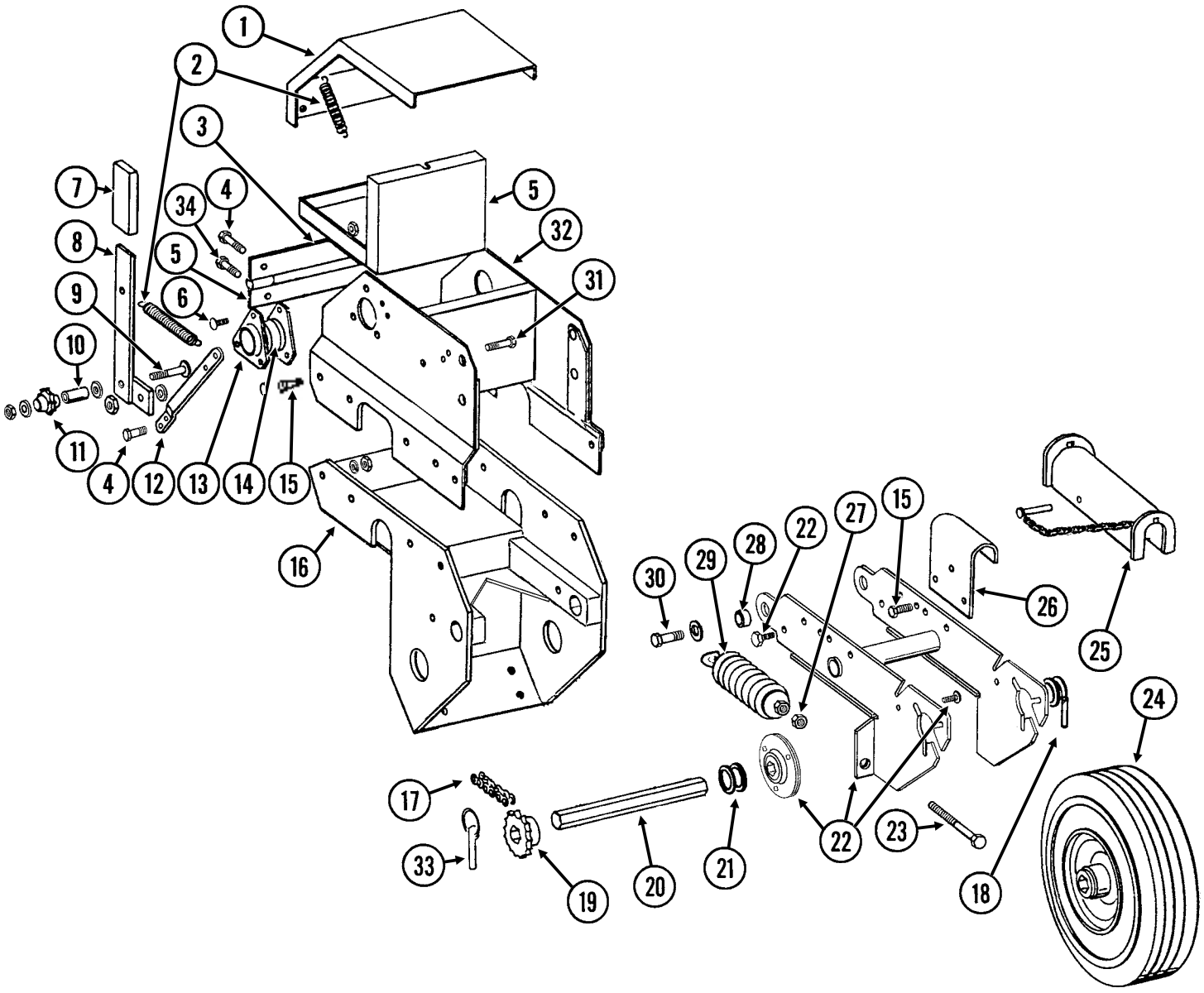

ITEM	PART NO.	QTY. (Per Assy.)	DESCRIPTION
1	GD5791	1	Cover
	G10860	-	Retaining Ring, ⅜"
	G10870	-	Clevis Pin, ⅜" x 1"
2	GD5857	2	Spring
3	GA13790	1	Slip Joint Assembly
	GD5789	1	Hinge W/Pins, Female (Included W/GA13790)
	GD5790	1	Hinge W/Pins, Male (Included W/GA13790)
4	G10064	4	Hex Head Cap Screw, ¼"-20 x 1"
	G10621	4	Serrated Flange Nut, ¼"-20
5	GA7235	1	Tool Box Insert
6	G10303	-	Carriage Bolt, 5⁄16"-18 x 1"
	G11386	-	Washer, 5⁄16" SAE (As Required)
	G10620	-	Serrated Flange Nut, 5⁄16"-18
7	GD5827	1	Cover

ITEM	PART NO.	QTY. (Per Assy.)	DESCRIPTION
8	GA5157	1	Idler Arm, L.H.
	GA5158	-	Idler Arm, R.H.
9	G10306	1	Carriage Bolt, ⅜"-16 x 2"
	G11387	-	Flat Washer, ⅜" SAE (As Required)
	G10108	1	Lock Nut, ⅜"-16
10	GD1026	1	Sleeve, 1 3/16" Long
11	GD7426	1	Sprocket, 12 Tooth
12	GD5860	1	Bar
13	G3400-01	-	Flangette
14	G2100-03	-	Bearing, ⅞" Hex Bore, Spherical
15	G10004	8	Hex Head Cap Screw, ⅜"-16 x 1¼"
	G10622	8	Serrated Flange Nut, ⅜"-16
16	---	-	See “Transport and Ground Drive Wheel Assembly” on page P45
17	G3310-132	1	Chain, No. 40, 132 Pitch Including Connector Link
	GR0912	-	Connector Link, No. 40
18	G10602	1	Spring Pin, ¼" x 1½"
19	GA5105	1	Sprocket, 15 Tooth
20	GD6825-10.5	1	Hex Shaft, ⅞" x 10½" (2 Holes)
21	G10233	6	Machine Bushing, 1", 10 Gauge
22	A7370	1	Arm W/Flanged Bearings and Hardware **(Non-Stock Item) (Sub G1K253)**
	G10303	6	Carriage Bolt, 5/16"-18 x 1" (Included W/A7370)
	G10620	6	Serrated Flange Nut, 5/16"-18 (Included W/A7370)
	GA9846	2	Flanged Bearing, ⅞" Hex Bore (Included W/A7370)
	G10055	2	Hex Head Cap Screw, ⅝"-11 x 1¼" (Stop Bolt) (Included W/A7370)
	G10107	2	Lock Nut, ⅝"-11 (Included W/A7370)
23	G11232	2	Hex Head Cap Screw, ½"-13 x 4", Grade 5
24	GA5090	1	Tire and Rim Assembly (Specify Brand*)
	GD5753	-	Tire, 4.10" x 6" (Specify Brand*) (Included W/GA5090)
	GD5752	-	Inner Tube (Included W/GA5090)
25	GA9870	-	Lockup W/Pin
	G10874	-	Detent Pin, ½" x 3½" Grip (Included W/GA9870)
26	GD7944	1	Mount
27	G10501	2	Hex Jam Nut, ½"-13, Grade 2
28	GB0218	2	Bushing, 21/32" I.D. x ⅞" O.D. x 19/32" Long
29	GA2068	2	Spring W/Plug
30	G10005	2	Hex Head Cap Screw, ⅝"-11 x 1¾"
	G10235	6	Machine Bushing, ⅞", 14 Gauge
	G11391	2	Flat Washer, ⅝" SAE
	G10107	2	Lock Nut, ⅝"-11
31	G10004	1	Hex Head Cap Screw, ⅜"-16 x 1¼"
	G10229	1	Lock Washer, ⅜"
	G10370	1-2	Machine Bushing, ⅜", 22 Gauge
	GD5756	1	Special Nut, ⅜"-16
32	GA5118	1	Mount
33	GD2558	1	Lynch Pin, ¼"
34	G10064	2	Hex Head Cap Screw, ¼"-20 x 1"
	G11385	2	Flat Washer, ¼" SAE
	G10227	2	Lock Washer, ¼"
	G10103	2	Hex Nut, ¼"-20
A	G1K253	-	Contact Wheel Arm Replacement Kit, (Items 18, 20, 22, 23 and 27)

*** Specific brand requests will be supplied only as available from current Kinze Repair Parts stock. If a specific brand requested is not in stock, the brand available will be supplied. Different brand tires may have different diameters. Change in tire brand may affect rates. Field checks are recommended after any change in contact tires.**

PTD033(PT5b)

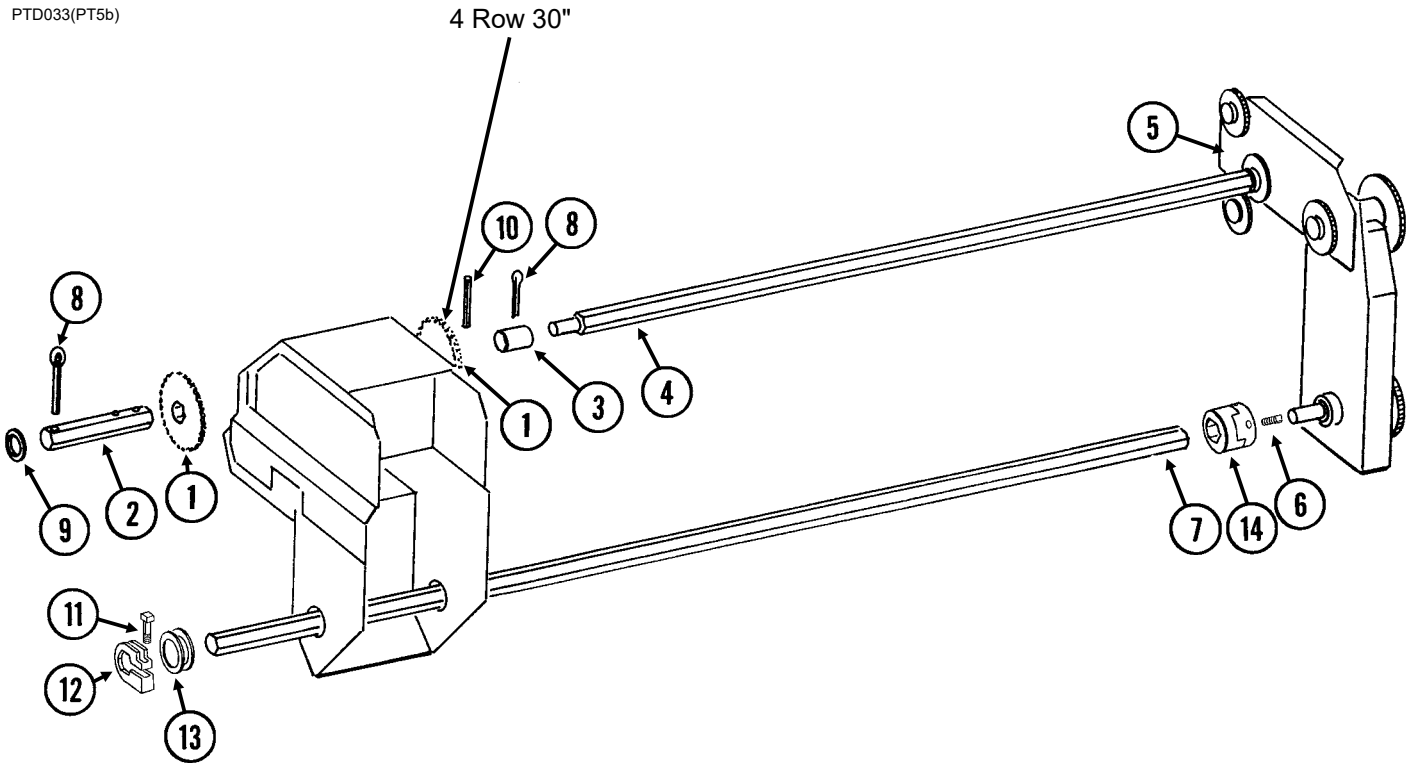

ITEM	PART NO.	QTY.	DESCRIPTION
1	GA5114	1	Sprocket, 30 Tooth
2	GD7819	1	Hex Shaft, ⅞" x 15¼" (3 Holes), 4 Row 30"
3	GD5961	1	Coupler, 2¼"
4	GD5885-02	1	Hex Shaft, ⅞" x 19" (6 Holes), 4 Row 30"
5	---	-	See “Seed Rate Transmission Assembly” on page P51
6	G10131	4	Square Head Set Screw, 5⁄16"-18 x ¾"
7	GD0914-109	1	Hex Shaft, ⅞" x 109" (No Holes), 4 Row 30"
8	G10460	2	Cotter Pin, ¼" x 2"
9	G10233	-	Machine Bushing, 1", 10 Gauge (As Required)
10	G10602	1	Spring Pin, ¼" x 1½"
11	G10130 G10923	1 1	Square Head Machine Bolt, 5⁄16"-18 x 1¾" Flange Nut, 5⁄16"-18, No Serration
12	GD11045	1	Lock Clamp
13	G10233	2	Machine Bushing, 1", 10 Gauge
14	GB0287	2	Coupler

PTD016/PTD034(PT6/PT7c)

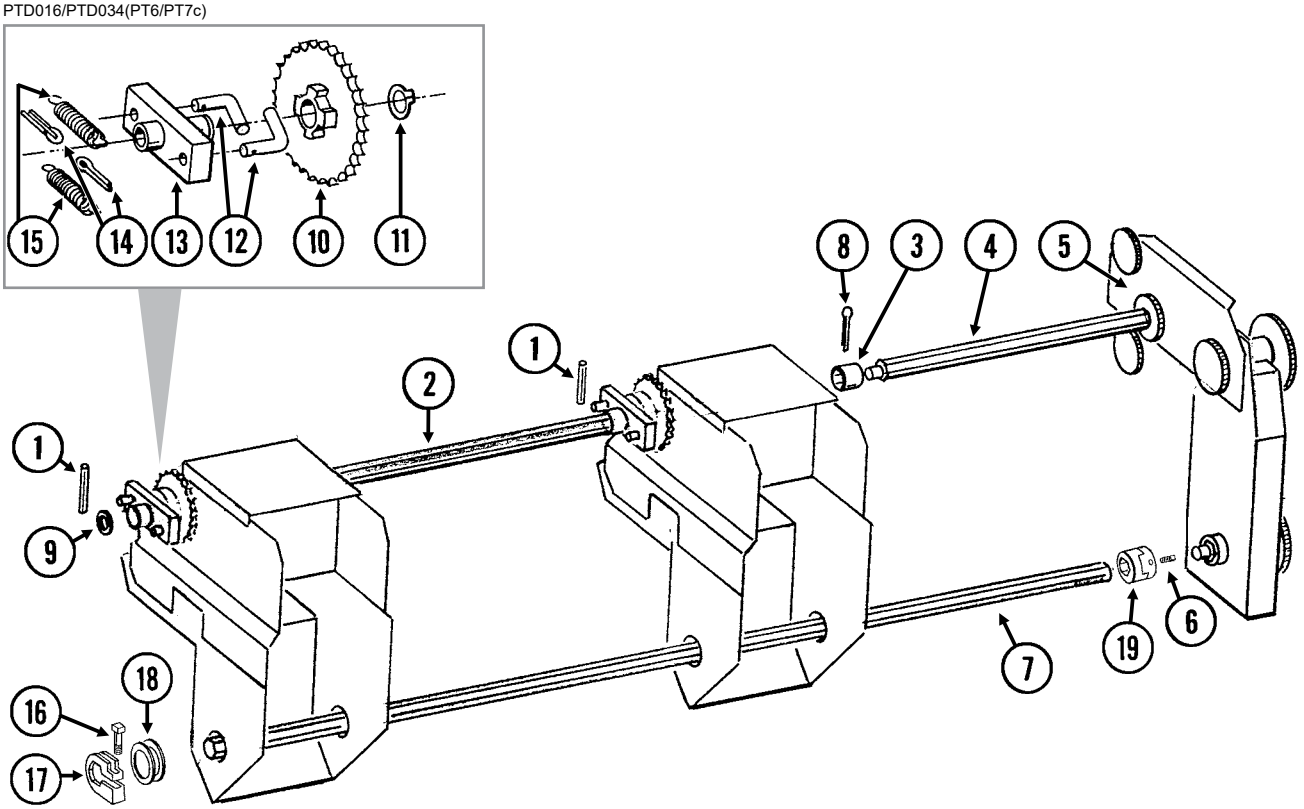

ITEM	PART NO.	QTY.	DESCRIPTION
1	G10602	2	Spring Pin, ¼" x 1½"
2	GD5884-01	1	Hex Shaft, ⅞" x 36" (3 Holes), 6 Row 30" and 8 Row 30"
3	GD5961	1	Coupler, 2¼"
4	GD5885-01	1	Hex Shaft, ⅞" x 30" (6 Holes), 6 Row 30" and 8 Row 30"
5	---	-	See “Seed Rate Transmission Assembly” on page P51
6	G10131	4	Square Head Set Screw, 5⁄16"-18 x ¾"
7	GD0914-170 GD0914-230	1 -	Hex Shaft, ⅞" x 170" (No Holes), 6 Row 30" Hex Shaft, ⅞" x 230" (No Holes), 8 Row 30"
8	G10460	2	Cotter Pin, ¼" x 2"
9	G10233	-	Machine Bushing, 1", 10 Gauge (As Required)
10	GA5165	1	Sprocket, 30 Tooth
11	G10430	1	External Retaining Ring, 1¼"
12	GD1255	2	L-Pin
13	GA0378	1	Block and Hub Assembly
14	G10453	2	Cotter Pin, 3⁄16" x 1"
15	GD1256	2	Spring
16	G10130 G10923	1 1	Square Head Machine Bolt, 5⁄16"-18 x 1¾" Flange Nut, 5⁄16"-18, No Serration
17	GD11045	1	Lock Clamp
18	G10233	2	Machine Bushing, 1", 10 Gauge
19	GB0287	2	Coupler
A	GA5164	-	Ratchet/Sprocket Assembly, Includes: (2) GD1256, (2) G10464,
B	GA11331	-	Hex Lock Clamp Assembly (Items 16 and 17)

(PT8k/PT8mm)

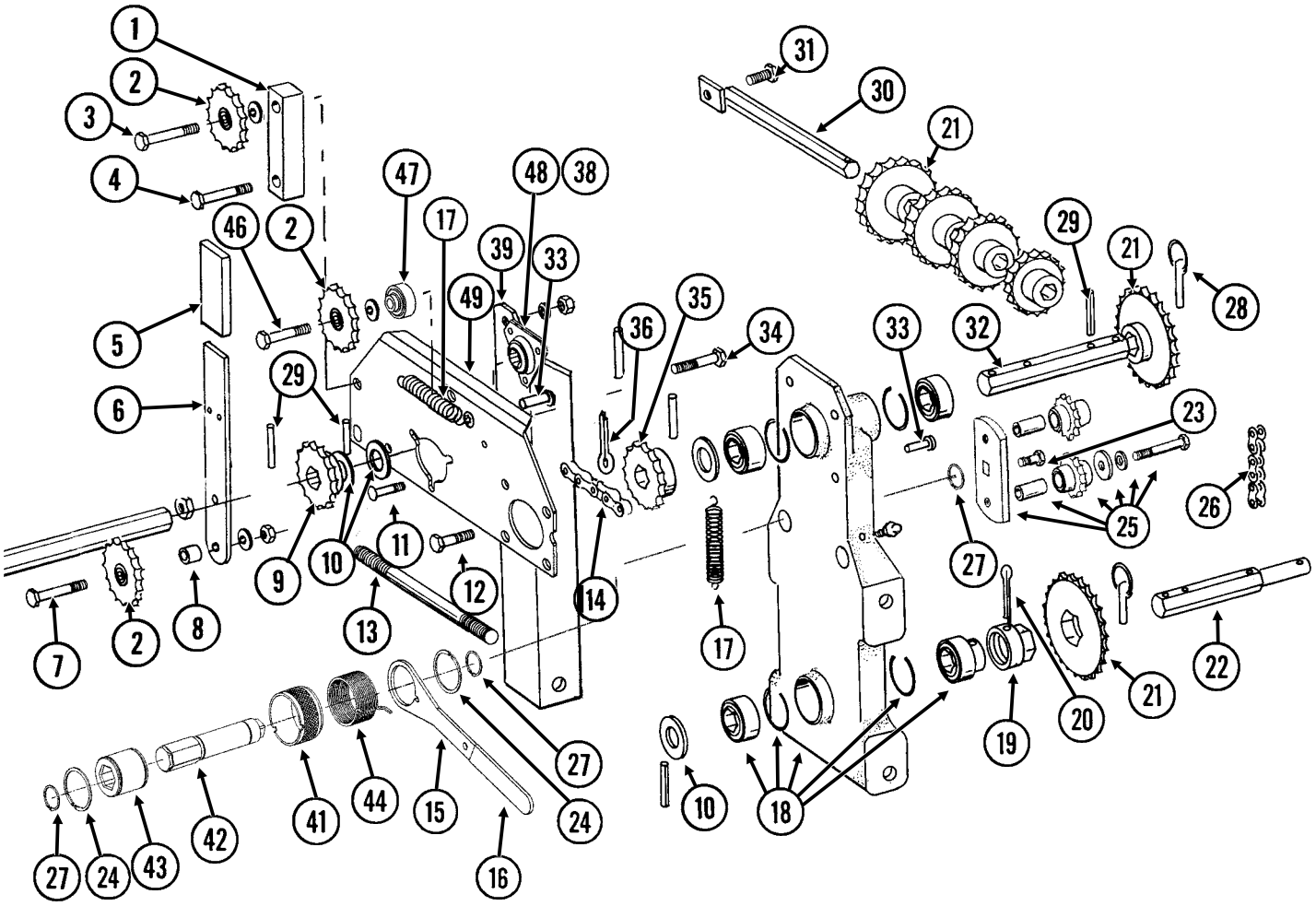
1
2
3
4
5
6
7
8
9
10
11
12
13
14
15
16
17
18
19
20
21
22
23
24
25
26
27
28
29
30
31
32
33
34
35
36
38
39
41
42
43
44
46
47
48
49

ITEM	PART NO.	QTY.	DESCRIPTION
1	GD12571	-	Spacer, 1" x 4"
2	GA7154	1	Sprocket W/Bearing, 18 Tooth
3	G10033	1	Hex Head Cap Screw, ½"-13 x 3½"
	G10128	-	Machine Bushing, ½", 14 Gauge (As Required)
	G10228	1	Lock Washer, ½"
	G10102	1	Hex Nut, ½"-13
4	G10053	1	Hex Head Cap Screw, ½"-13 x 2½"
	G10228	1	Lock Washer, ½"
	G10102	1	Hex Nut, ½"-13
5	GD5827	1	Cover
6	GD31450	1	Arm
7	G10053	1	Hex Head Cap Screw, ½"-13 x 2½"
	G10128	-	Machine Bushing, ½", 14 Gauge (As Required)
	G10111	1	Lock Nut, ½”-13
8	GD4887-01	1	Sleeve, ½" I.D. x ⅝" Long
9	GA5105	1	Sprocket, 15 Tooth
10	G10233	-	Machine Bushing, 1", 10 Gauge
11	G10303	3	Carriage Bolt, 5⁄16"-18 x 1"
	G10232	3	Lock Washer, 5⁄16"
	G10106	3	Hex Nut, 5⁄16"-18
12	G10037	3	Hex Head Cap Screw, ½"-13 x 1¼"
	G10228	3	Lock Washer, ½"
	G10102	3	Hex Nut, ½"-13
13	G10177	2	Hex Head Cap Screw, ⅝"-11 x 9½"
	G10230	2	Lock Washer, ⅝"
	G10104	2	Hex Nut, ⅝"-11
14	G3310-92	1	Chain, No. 40, 92 Pitch Including Connector Link
	G3310-100	-	Chain, No. 40, 100 Pitch Including Connector Link, Used With Half Rate (2 To 1) Drive Reduction
	GR0912	-	Connector Link, No. 40
15	GD14431	1	Handle
16	G11078	1	Vinyl Cap
17	GD5857	2	Spring
18	GA5629	1	Transmission Plate W/Bearings, Grease Fittings and Retaining Rings
	GA5116	3	Bearing, ⅞" Hex Bore, Cylindrical (Included W/GA5629)
	GA5624	1	Special Bearing, ⅞" Hex Bore x 1.6" (Included W/GA5629)
	GD6551	4	Ring (Included W/GA5629)
	G10640	-	Grease Fitting, ¼"-28 (Included W/GA5629)
19	GD7127	1	Shear Coupler
20	G10821	1	Clevis Pin, 3⁄16" x 2"
	G10455		Cotter Pin, 1⁄16" x ½"
21	GA5106	1	Sprocket, 17 Tooth
	GA5107	1	Sprocket, 19 Tooth
	GA5108	2	Sprocket, 23 Tooth
	GA5109	1	Sprocket, 24 Tooth
	GA5110	1	Sprocket, 25 Tooth
	GA5111	1	Sprocket, 26 Tooth
	GA5112	1	Sprocket, 27 Tooth
	GA5113	1	Sprocket, 28 Tooth
22	GD7822	1	Shaft, ⅞" x 7"
23	G11100	1	Hex Socket Button Head Cap Screw, ¼"-20 x ½", Grade 8
	G10227	1	Lock Washer, ¼"
	G11453	1	Fender Washer, ¼"
24	G10496	2	External Inverted Snap Ring, 1½"

Continued on next page.

ITEM	PART NO.	QTY.	DESCRIPTION
25	GA7336	1	Idler W/Bolt-On Sprockets
	GD7426	-	Sprocket, 12 Tooth (Included W/GA7336)
	GD1026	-	Sleeve, 1 3⁄16" Long (Included W/GA7336)
	G11387	-	Flat Washer, 3⁄8" SAE (Included W/GA7336)
	G10229	-	Lock Washer, 3⁄8" (Included W/GA7336)
	G10047	-	Hex Head Cap Screw, 3⁄8"-16 x 1 3⁄4" (Included W/GA7336)
26	G3310-80	1	Chain, No. 40, 80 Pitch Including Connector Link
	GR0912	-	Connector Link, No. 40
27	G11075	3	External Inverted Snap Ring, 7⁄8"
28	GD2558	3	Lynch Pin, 1⁄4"
29	G10602	5	Spring Pin, 1⁄4" x 1 1⁄2"
30	GA5146	1	Sprocket Storage Rod
31	G10017	1	Hex Head Cap Screw, 1⁄2"-13 x 1 1⁄2"
	G10527	1	Lock Washer, 1⁄2", Internal/External
	G10111	1	Lock Nut, 1⁄2"-13
32	GD5835	1	Shaft, 7⁄8" x 7"
33	G10870	1	Clevis Pin, 3⁄8" x 1"
	G10860	1	Retaining Ring, 3⁄8"
34	G10004	1	Hex Head Cap Screw, 3⁄8"-16 x 1 1⁄4"
	G10229	1	Lock Washer, 3⁄8"
	G11387	1	Flat Washer, 3⁄8" SAE
	GD15538	2	Spacer, 3⁄8" I.D. x 7⁄8" O.D., 7 Gauge
	GD5756	1	Special Nut, 3⁄8"-16
35	GA5106	1	Sprocket, 17 Tooth, Standard Drive
	GA5202	-	Sprocket, 34 Tooth, Half Rate (2 To 1) Drive Reduction
36	G10460	1	Cotter Pin, 1⁄4" x 2"
37	G2100-03	1	Bearing, 7⁄8" Hex Bore, Spherical
38	G3400-01	2	Flangette
39	GD30624	1	Angle Support, R.H.
40	---	---	---
41	GD19343	1	Release Collar, R.H.
42	GD14427	1	Tightener Shaft, 4 7⁄8"
43	GD14432	1	Sleeve, 1 1⁄4"
44	GD14413	1	Torsion Spring, L.H. (Used On R.H. Wrap Spring Wrench)
45	---	---	---
46	G10038	1	Hex Head Cap Screw, 1⁄2"-13 x 3"
	G10128	-	Machine Bushing, 1⁄2", 14 Gauge (As Required)
	G10111	1	Lock Nut, 1⁄2"-13
47	GB0259	-	Spacer, 1"
48	G2100-03	-	Bearing, 7⁄8" Hex Bore, Spherical
49	GD30622	-	Reverser Plate
A	G1K378	-	Wrap Spring Wrench Replacement Kit, Blue Collar, R.H. (Items 15, 16, 23, 24, 27 and 41-44)

This page left blank intentionally.

MKR010(MKR1a)

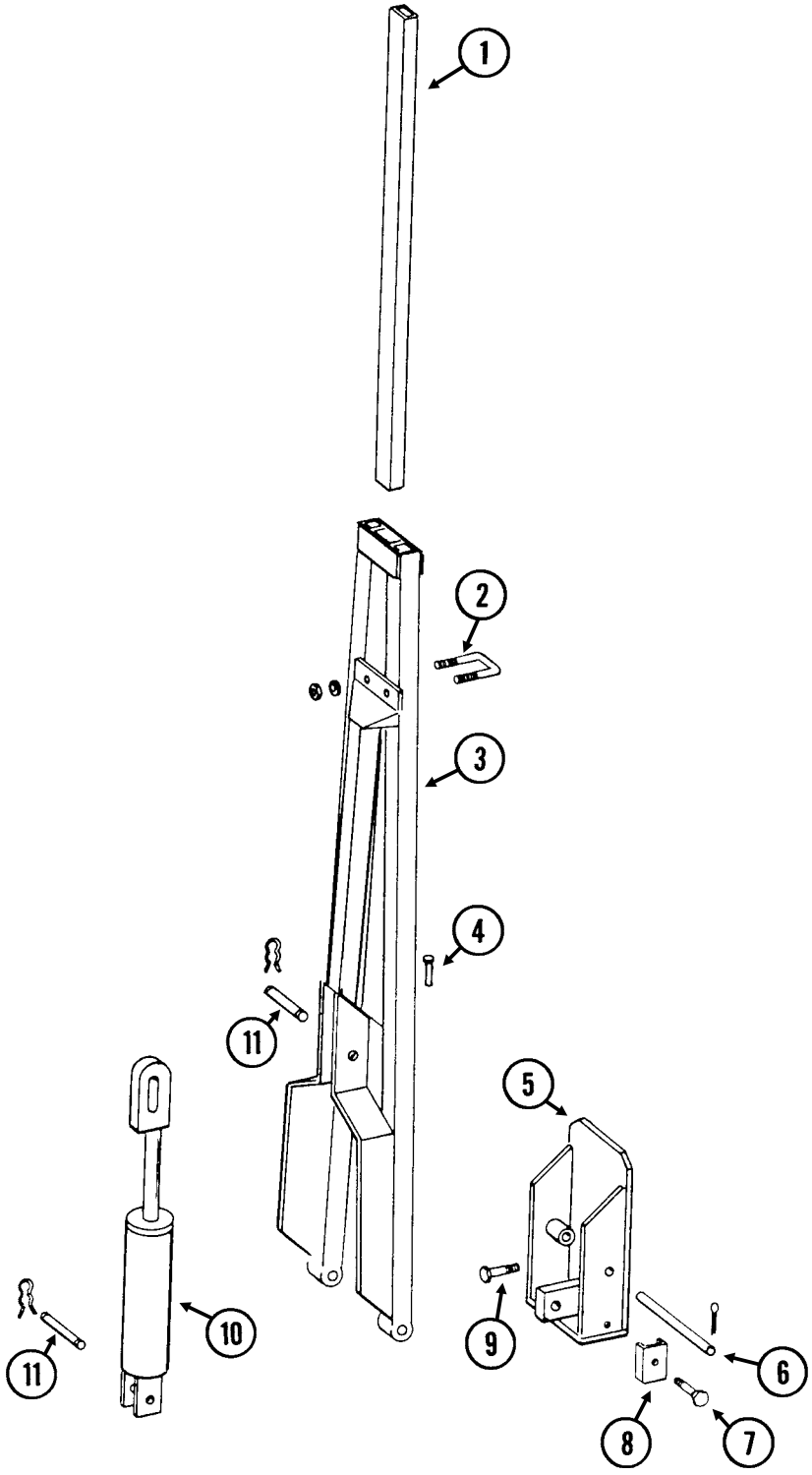

ITEM	PART NO.	QTY. (Per Assy.)	DESCRIPTION
1	GD0453-02	1	Extension Tube, 40", 4 Row 30"
	GD0453-06	-	Extension Tube, 30", 4 Row 30" W/Optional Split Row Package
	GD0453-07	-	Extension Tube, 45", 6 Row 30"
2	GD2721	1	U-Bolt, 2" x 2" x ½"-13
	G10228	2	Lock Washer, ½"
	G10102	2	Hex Nut, ½"-13
3	GA5175	1	Arm W/Grease Fittings, 31½", 4 Row 30"
	GA5183	-	Arm W/Grease Fittings, 58½", 6 Row 30"
	G10640	-	Grease Fitting, ¼"-28 (Included W/GA5175, GA5184, or GA5183)
4	GD0462	1	Safety Lockup Pin
	G10670	1	Hair Pin Clip, No. 3
	G10187	1	Spring Pin, 5⁄32" x 2"
5	GA5177	1	Mount W/Grease Fittings, 4 Row 30"
	GA5178	-	Mount W/Grease Fittings, 6 Row 30"
	G10640	-	Grease Fitting, ¼"-28 (Included W/GA5177 or GA5178)
6	GD0438	1	Pin, 13½"
	G10460	2	Cotter Pin, ¼" x 2"
7	G10133	1	Hex Head Cap Screw, 5⁄16"-18 x 1½"
	G10109	1	Lock Nut, 5⁄16"-18, Grade 8
8	GD5892	1	Hose Clamp, ⅝" x 1½" x 1½"
9	G10008	4	Hex Head Cap Screw, ⅝"-11 x 2"
	G10230	4	Lock Washer, ⅝"
10	---	-	See “Row Marker Cylinder, 4 Row 30” and 6 Row 30”” on page P66
11	GR0962	1	Pin, 1" x 3⅜"
	GR0193	2	Hair Pin Clip

MKR006/MKR009(MKR2fff)

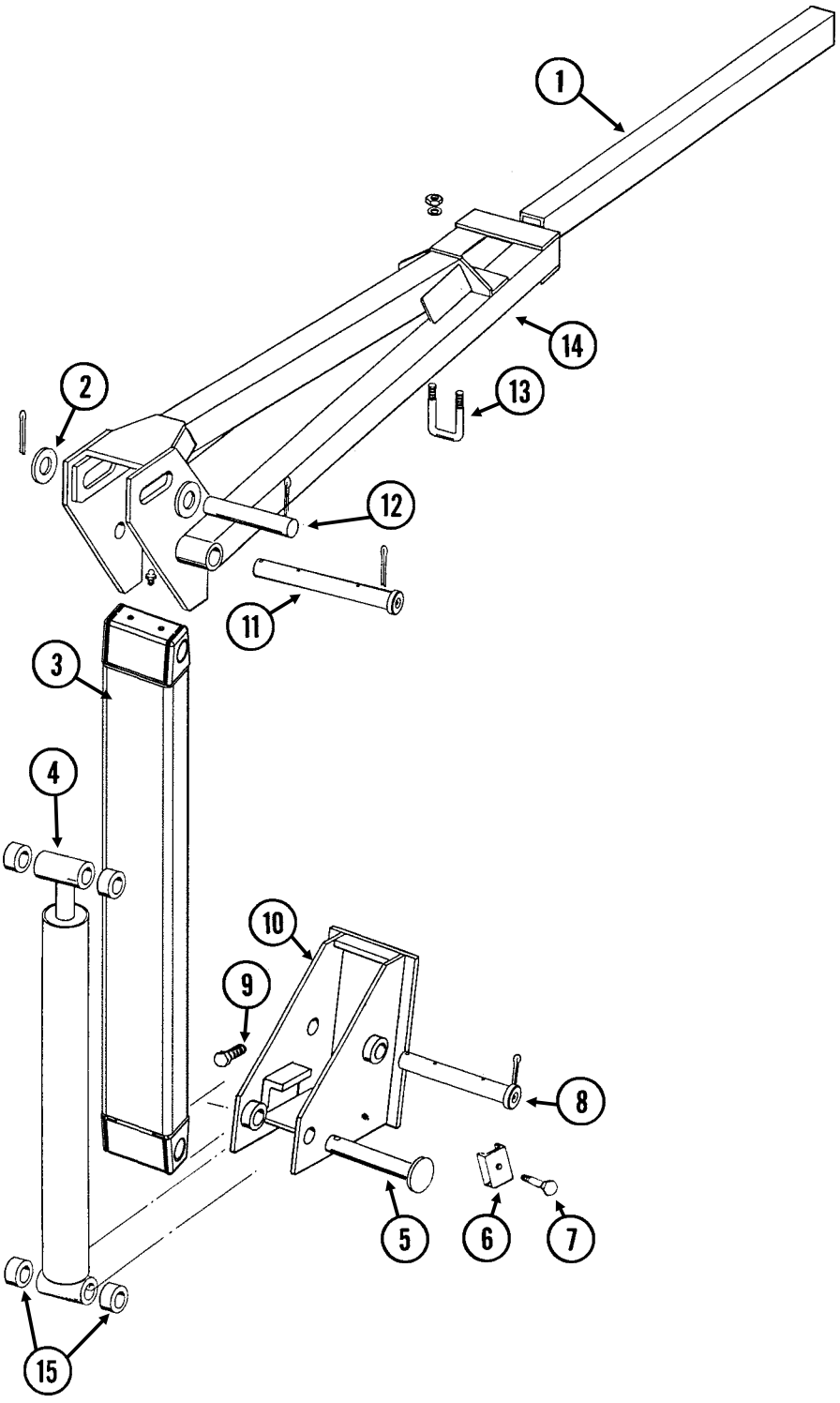

ITEM	PART NO.	QTY. (Per Assy.)	DESCRIPTION
1	GD0453-03	1	Extension Tube, 50", 8 Row 30"
2	G11396	2	Flat Washer, 1¼" SAE
3	GA11591	-	Arm, First Stage
4	---	-	See “Row Marker Cylinder, 4 Row 30” and 6 Row 30”” on page P66
5	GD15386 G10460	1 1	Pin, 1¼" x 7⅝" Cotter Pin, ¼" x 2"
6	GD5875	1	Hose Clamp
7	G10133 G10109	1 1	Hex Head Cap Screw, 5⁄16"-18 x 1½" Lock Nut, 5⁄16"-18, Grade 8
8	GA11767 G10640 G10460	- - 1	Pin W/Grease Fitting, 1¼" x 9½" Grease Fitting, ¼"-28 (Included W/GA11767) Cotter Pin, ¼" x 2" (Included W/GA11767)
9	G10879	4	Flanged 12 Point Bolt, ⅝"-11 x 2", Special Hardened
10	GA5130	1	Mount
11	GA11766 G10640 G10460	- - 1	Pin W/Grease Fitting, 1¼" x 11 13⁄16" Grease Fitting, ¼"-28 (Included W/GA11766) Cotter Pin, ¼" x 2" (Included W/GA11766)
12	GD2161 G10460	1 2	Pin, 1¼" x 8¼" Cotter Pin, ¼" x 2"
13	GD2721 G10228 G10102	1 2 2	U-Bolt, 2" x 2" x ½"-13 Lock Washer, ½" Hex Nut, ½"-13
14	GA5188	1	Arm, Second Stage, 35", 6 Row 36"/38"
15	GD0752-41	-	Sleeve, 1" (If Applicable)

IP1035aa

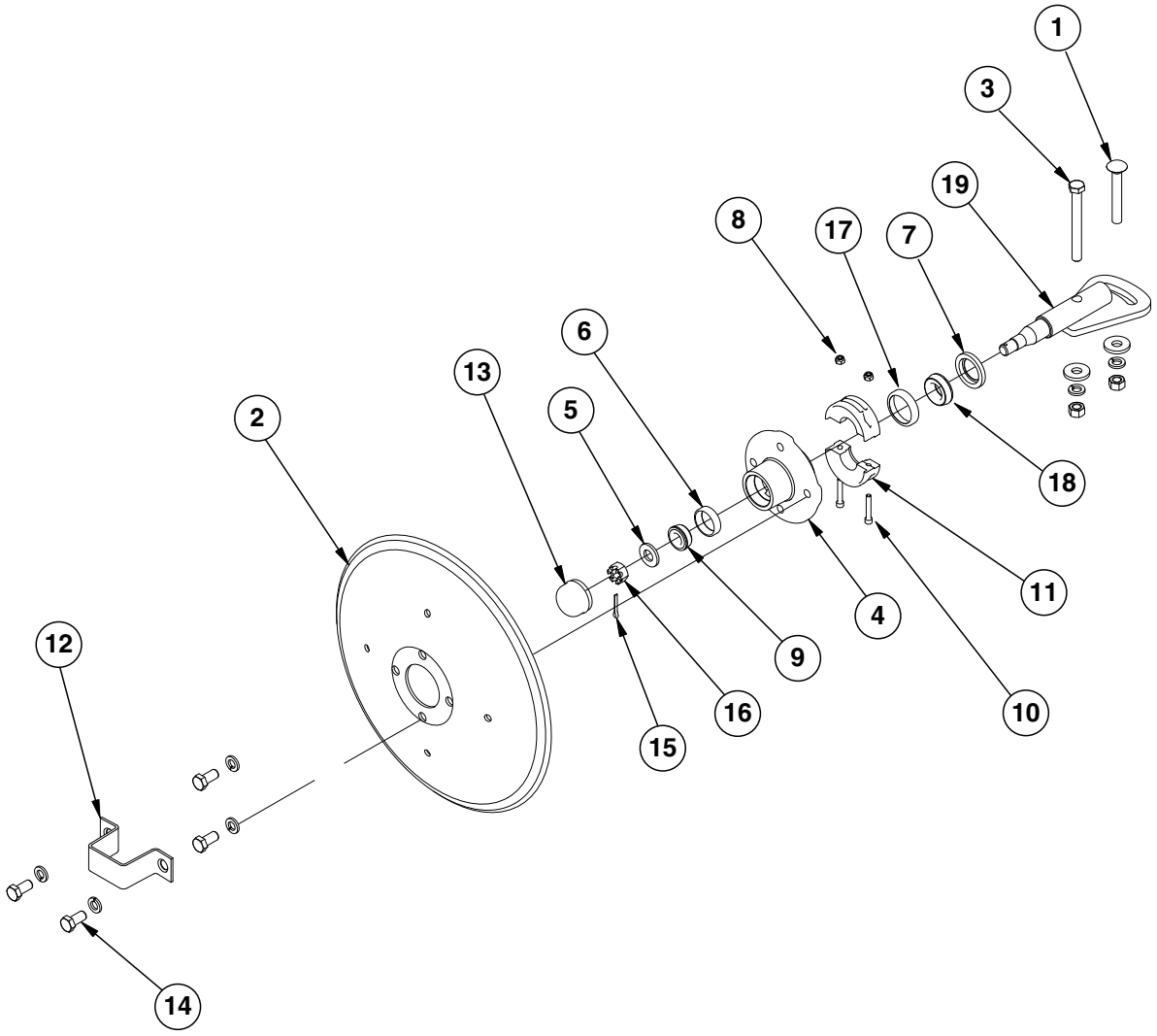

ITEM	PART NO.	QTY. (Per Assy.)	DESCRIPTION
1	G10844	1	Carrriage Bolt, ½"-13 x 3½"
	G10168	2	Machine Bushing, ½", 7 Gauge
	G10228	2	Lock Washer, ½"
	G10102	2	Hex Nut, ½"-13
2	GD0746	1	Disc Blade, Solid, 16" (Shown)
	GD10283	-	Disc Blade, Notched, 16" (Optional)
3	G10045	1	Hex Head Cap Screw, ½"-13 x 4½"
	G10168	2	Machine Bushing, ½", 7 Gauge
	G10228	2	Lock Washer, ½"
	G10102	2	Hex Nut, ½"-13
4	GA26876	1	Hub W/Cups, 4 Bolt (Includes Items 6 and 17)
5	G11391	1	Flat Washer, ⅝" SAE
6	GR0151	1	Outer Cup
7	GD21540	1	Grease Seal
8	G10110	2	Lock Nut, ¼"-20, Grade B
9	GA0257	1	Bearing
10	G11418	2	Hex Socket Head Cap Screw, ¼" x 1½"
11	GB0554	2	Hub Shield
12	GD2597	1	Retainer
13	GD0840	1	Dust Cap
14	G10722	4	Hex Head Cap Screw, ½"-20 x 1"
	G10228	4	Lock Washer, ½"
15	G10544	1	Cotter Pin, 5⁄32" x 1"
16	G10725	1	Slotted Hex Nut, ⅝"-18
17	GR0150	1	Inner Cup
18	GA0245	1	Bearing
19	GA15151	1	Spindle
A	GA26909	-	Marker Hub Assembly, (Items 4-6 and 8-19)

A21003

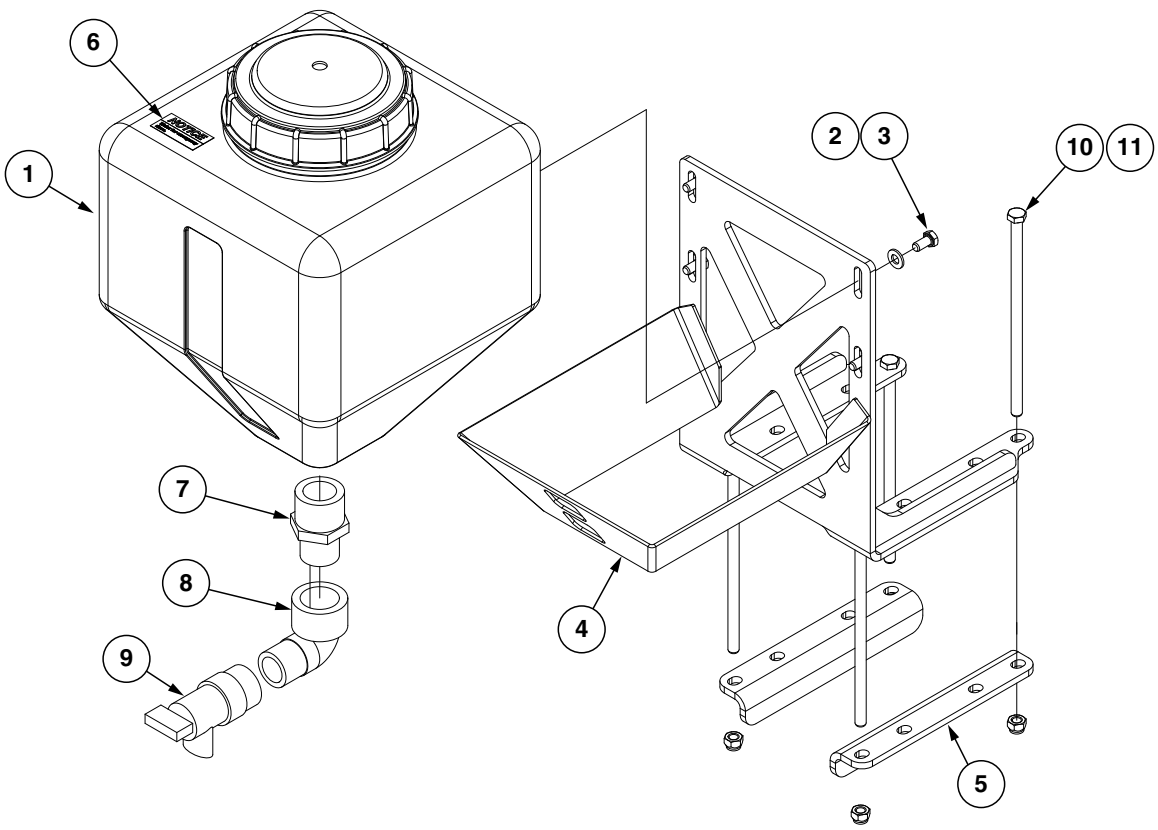

ITEM	PART NO.	QTY.	DESCRIPTION
1	GD30723	1	4 Gallon Water Tank W/Lid
2	G11386	4	Flat Washer, 5⁄16" SAE
3	G10018	4	Hex Head Cap Screw, 5⁄16"-18 x 5⁄8"
4	GA24449	1	Water Tank Mount
5	GD30221	2	Water Tank Mount Brackets
6	G7100-501	1	Decal, Notice
7	G10727	1	Reducing Nipple, 1-1/4" x 1"
8	G11742	1	1" NPT 90° Elbow
9	GD30722	1	1" NPTF Flush Valve
10	G10686	4	Hex Head Cap Screw, 3⁄8"-16 x 8"
11	G10108	4	Lock Nut, 3⁄8"-16

This page left blank intentionally.

(IP1523)

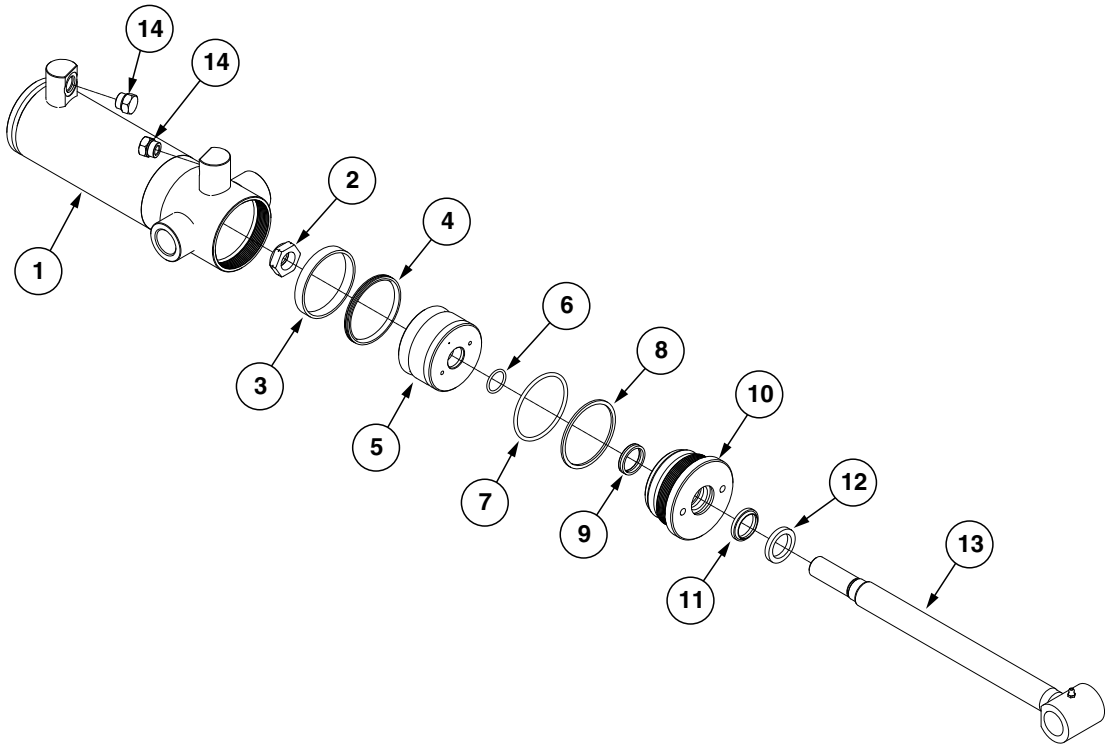

ITEM	PART NO.	QTY.	DESCRIPTION
1	A4295	1	Barrel (Non-Stock Item)
2	GD27235	1	Nylon Lock Nut, 1"-14, Grade 8
3	*D12056	1	Wear Ring
4	*A26168	1	BP Seal
5	GA21112	1	Piston
6	*D29649	1	O-Ring, No. 215
7	*D12231	1	O-Ring, No. 338
8	*D12232	1	BU Ring
9	*D12251	1	U-Cup
10	GD12507	1	Gland
11	*D12210	1	Wiper
12	GD12102	1	Ring
13	GA21106	1	Rod
14	G6408-08 GR1037	2 -	Plug W/O-Ring, ¾"-16 O-Ring O-Ring
A	GA21111	-	Cylinder Complete, 3½" x 8" *(Part Number Stamped On Barrel)*
B	GR2228	-	Seal Kit, Includes: (1) Wiper, (3) O-Rings, (1) BU Ring, (1) BP Seal, (1) Wear Ring, (1) U-Cup

*Item is part of seal kit, item can not be purchased individaully.

(IP1524)

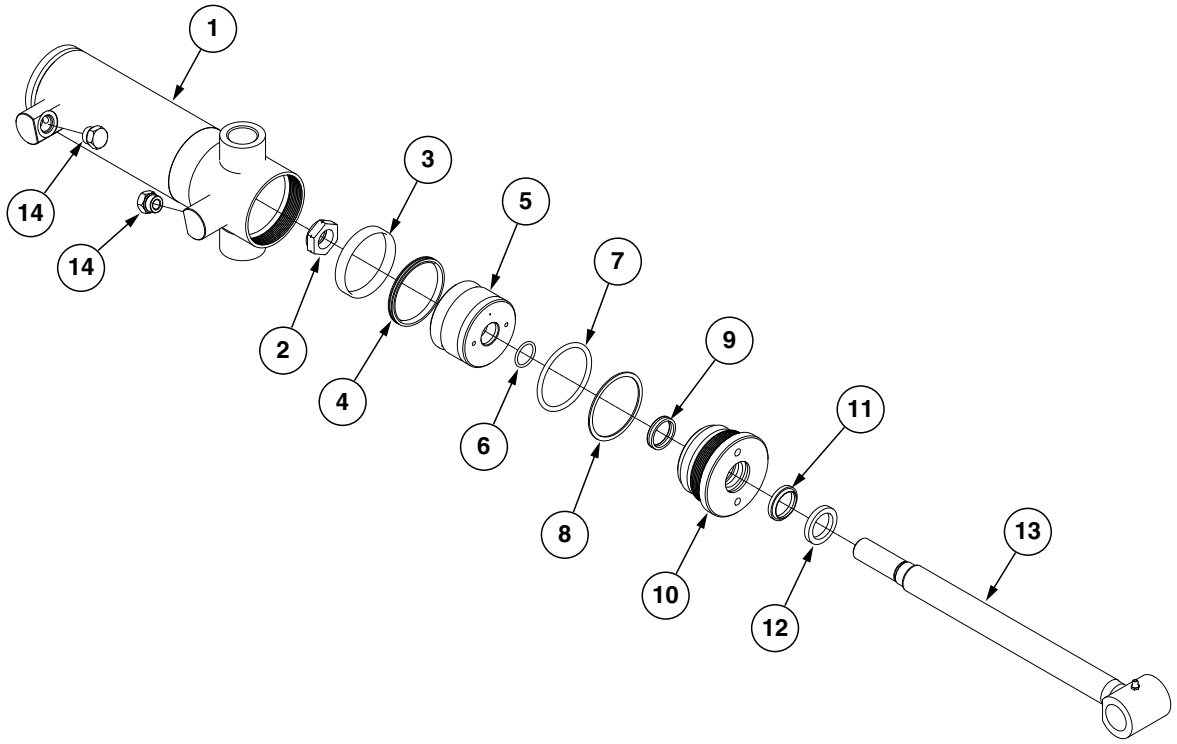

ITEM	PART NO.	QTY.	DESCRIPTION
1	A7538	1	Barrel
2	GD27235	1	Nylon Lock Nut, 1"-14, Grade 8
3	*D12038	1	Wear Ring
4	*A26167	1	BP Seal
5	GA21105	1	Piston
6	*D29649	1	O-Ring, No. 215
7	*D12227	1	O-Ring, No. 336
8	*D12228	1	Back-Up Ring
9	*D12251	1	U-Cup
10	GD12505	1	Gland
11	*D12210	1	Wiper
12	GD12102	1	Ring
13	GA21106	1	Rod
14	G6408-08 GR1037	2 -	Plug W/O-Ring, ¾"-16 O-Ring O-Ring
A	GA21104	-	Cylinder Complete, 3 ¼" x 8" *(Part Number Stamped On Barrel)*
B	GR2225	-	Seal Kit, Includes: (1) Wiper, (1) U-Cup, (3) O-Rings, (1) BU Ring, (1) BP Seal, (1) Wear Ring

*Item is part of seal kit, item can not be purchased individaully.

(IP1525)

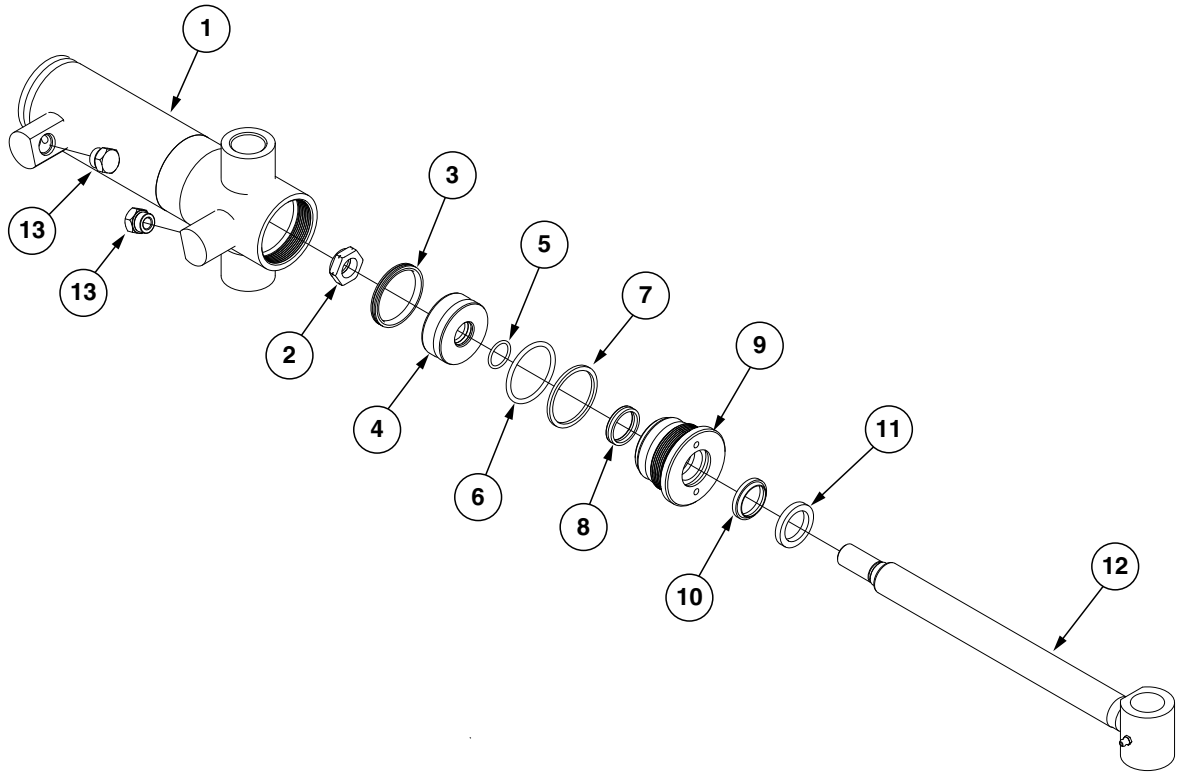

ITEM	PART NO.	QTY.	DESCRIPTION
1	A8827	1	Barrel
2	GD27234	1	Nylon Lock Nut, ⅞"-14, Grade 8
3	*A24473	1	BP Seal
4	GD30401	1	Piston
5	*D30399	1	O-Ring, No. 119
6	*D12212	1	O-Ring, No. 330
7	*D12213	1	BU Ring
8	*D12251	1	U-Cup
9	GD11985	1	Gland
10	*D12210	1	Wiper
11	GD12102	1	Ring
12	GA21185	1	Rod
13	G6408-08	2	Plug W/O-Ring, ¾"-16 O-Ring
	GR1037	-	O-Ring
A	GA21184	-	Cylinder Complete, 2½" x 8" *(Part Number Stamped On Barrel)*
B	GR2227	-	Seal Kit, Includes: (1) Wiper, (3) O-Rings, (1) BU Ring, (1) BP Seal, (1) U-Cup

*Item is part of seal kit, item can not be purchased individaully.

(IP1528)

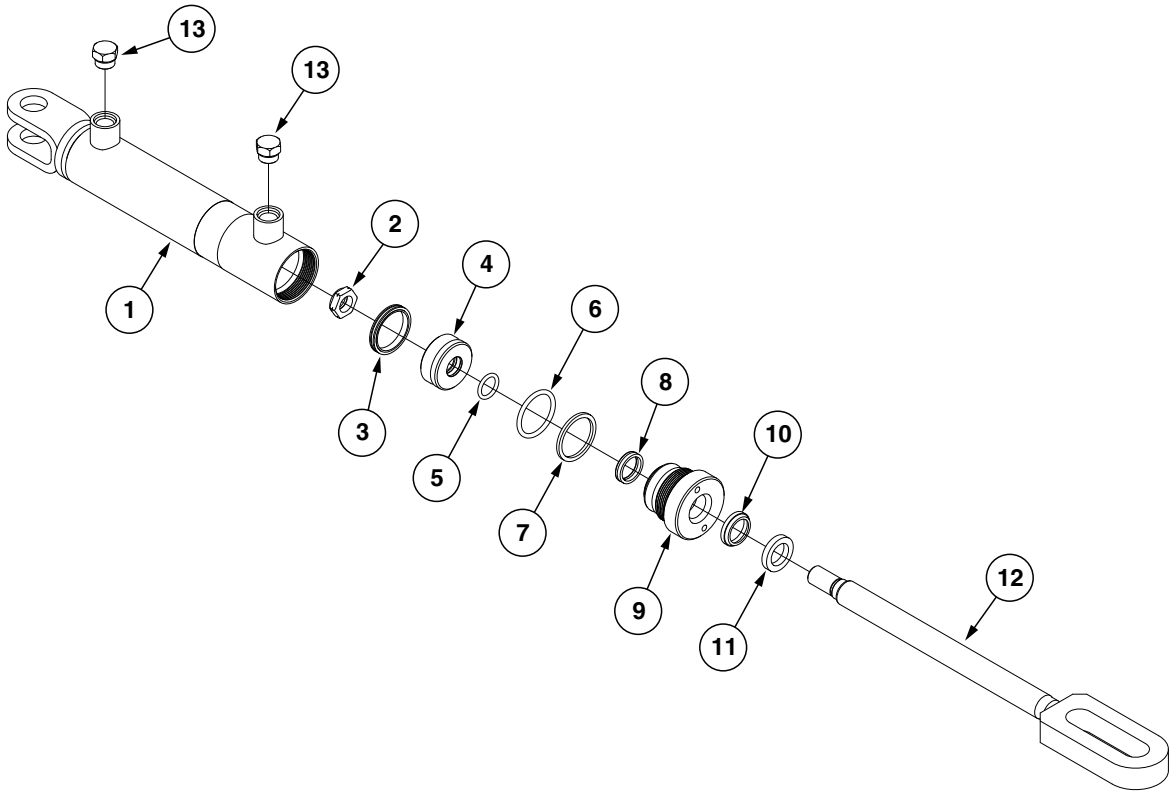

ITEM	PART NO.	QTY.	DESCRIPTION
1	A8775	1	Barrel
2	GD27233	1	Nylon Lock Nut, ¾"-16, Grade 8
3	*D12277	1	T-Seal
4	GD29689	1	Piston
5	*D29692	1	O-Ring, No. 211
6	*D12235	1	O-Ring, No. 326
7	*D12236	1	Back-Up Ring
8	*D12256	1	U-Cup
9	GD12510	1	Gland
10	*D12233	1	Wiper Rod
11	GD12101	1	Ring
12	GA21168	1	Rod
13	G6408-08 GR1037	2 -	Plug W/O-Ring, ¾"-16 O-Ring O-Ring
A	GA21167	-	Cylinder Complete, 2" x 8" *(Part Number Stamped On Barrel)*
B	GR2229	-	Seal Kit, Includes: (1) Wiper, (2) U-Cup, (3) O-Rings, (1) BU Ring, (1) T-Seal, (1) Instrcution Sheet

*Item is part of seal kit, item can not be purchased individaully.

(IP1527)

¾"-16 O-Ring Ports

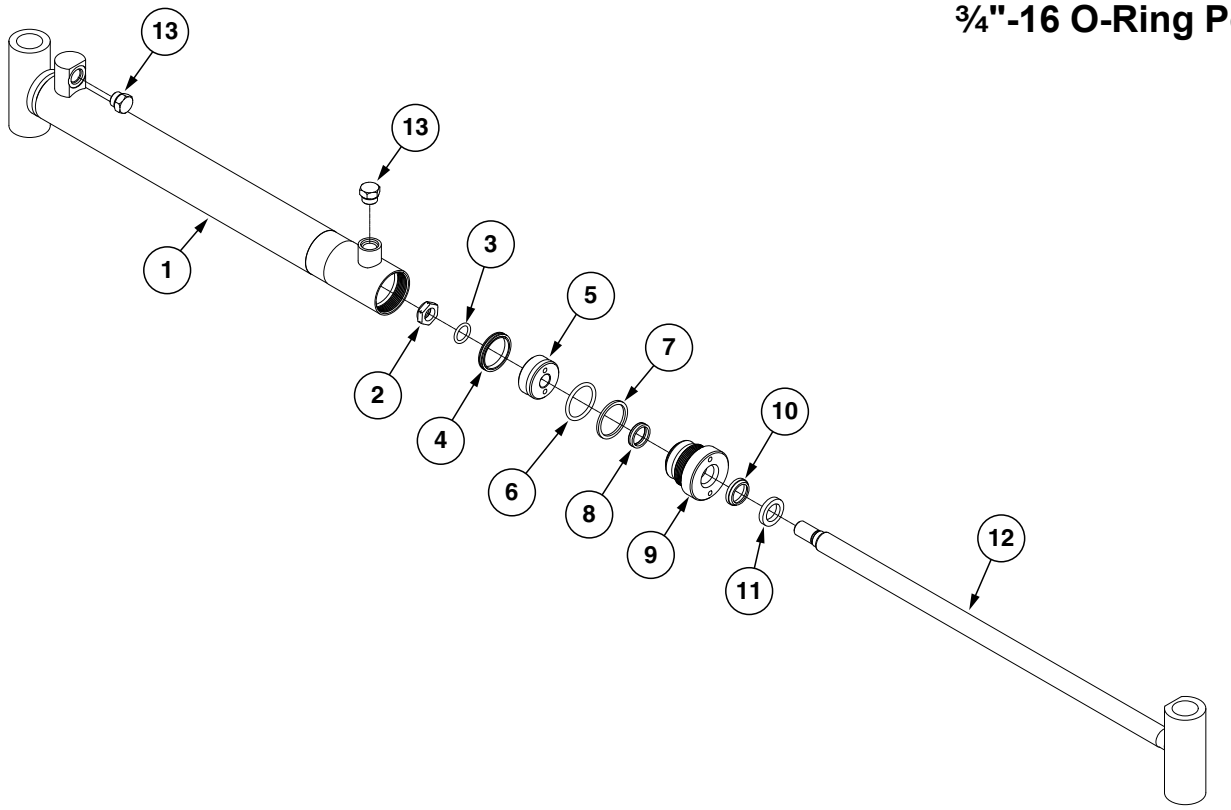

ITEM	PART NO.	QTY.	DESCRIPTION
1	A9442	1	Barrel
2	GD27233	1	Nylon Lock Nut, 3/4"-16, Grade 8
3	*D29692	1	O-Ring, No. 211
4	*D12277	1	T-Seal
5	GD29689	1	Piston
6	*D12235	1	O-Ring, No. 326
7	*D12236	1	Back-Up Ring
8	*D12256	1	U-Cup
9	GD12510	1	Gland
10	*D12233	1	Wiper Rod
11	GD12101	1	Ring
12	GA21159	1	Rod
13	G6408-08 GR1037	2 -	Plug W/O-Ring, ¾"-16 O-Ring O-Ring
A	GA21158	-	Cylinder Complete, 2" x 20 1/16" *(Part Number Stamped On Barrel)*
B	GR2229	-	Seal Kit, Includes: (1) Wiper, (2) U-Cup, (3) O-Rings, (1) BU Ring, (1) T-Seal, (1) Instrcution Sheet

*Item is part of seal kit, item can not be purchased individaully.

(CYL33c)

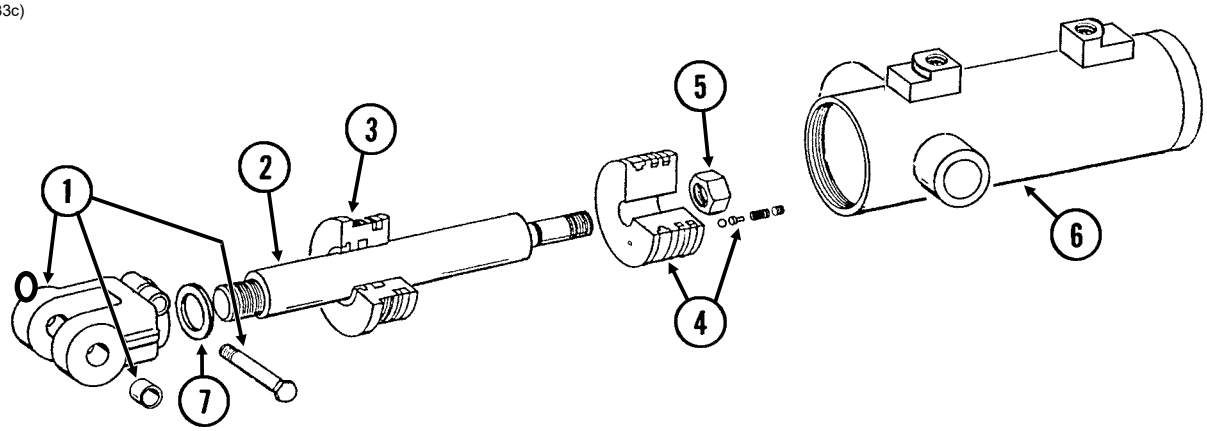

ITEM	PART NO.	QTY.	DESCRIPTION
1	GA8130	1	Clevis W/Bushings, Hex Head Cap Screw and Hex Nut
	GD11751	2	Steel Bushing, 1" Wide
	G10939	1	Hex Head Cap Screw, ⅜"-16 x 2¼"
	G10101	1	Hex Nut, ⅜"-16
2	GD12513	1	Rod
3	GD11995	1	Gland
4	GA8924	1	Piston W/Rephasing Valve
	GR1169	-	Rephasing Valve Replacement Kit (Includes: Set Screw, Guide, 2 Springs and Ball)
5	GD27235	1	Nylon Lock Nut, 1"-14, Grade 8
6	A8923	1	Barrel
7	G10957	4	Steel Shim
A	GA8897	-	Cylinder Complete, 4¼" x 4" *(Part Number Stamped On Barrel)*
B	GR1523	-	Seal Kit, Includes: (1) Wiper, (2) O-Rings, (1) BU Ring, (1) U-Cup, (1) Seal, (1) Expander, (2) Cast Iron Ring

This page left blank intentionally.

VVB025/PHS035(PT11a)

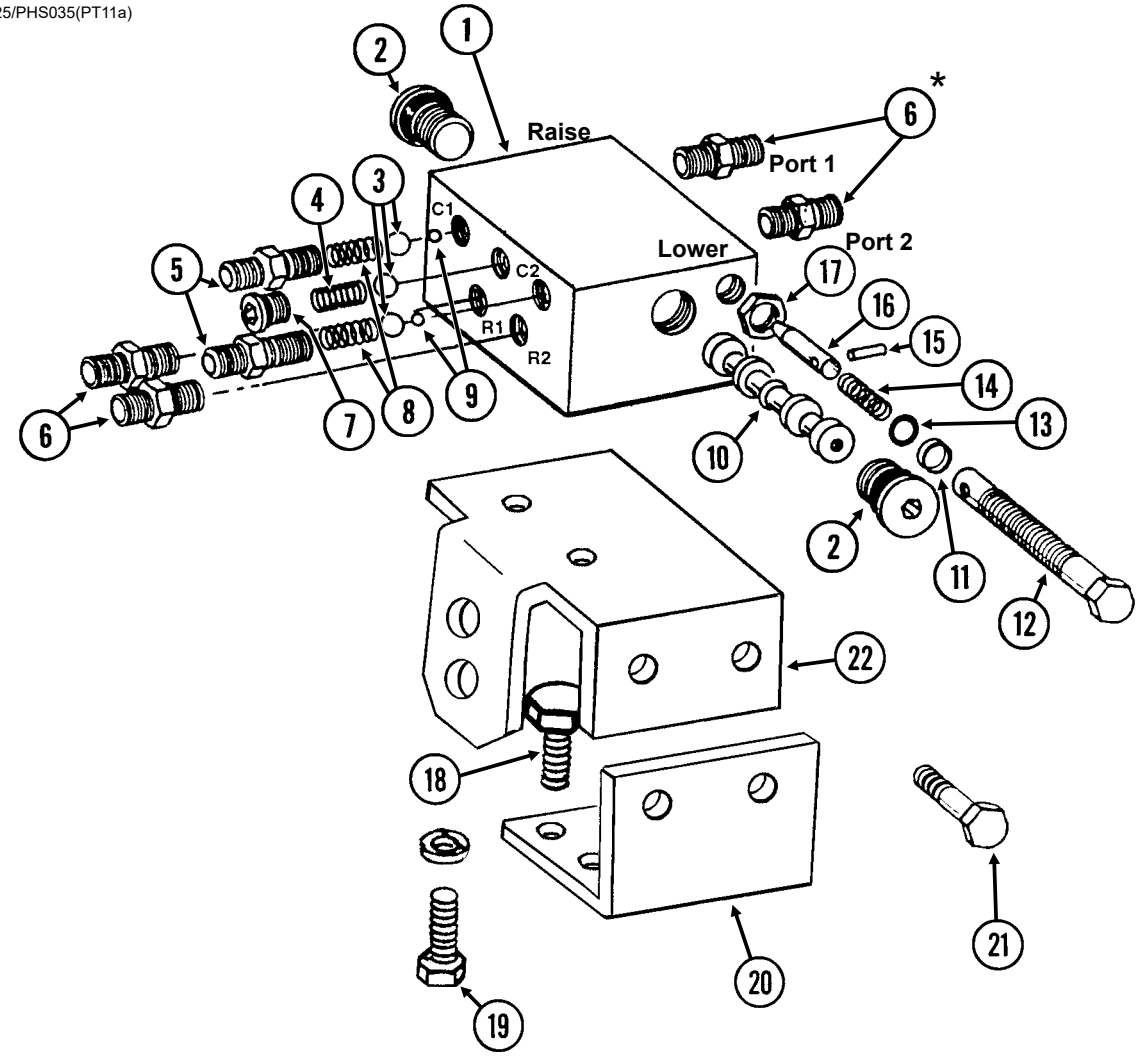

ITEM	PART NO.	QTY.	DESCRIPTION
1	---	-	Valve Body **(Non-Stock Item)**
2	GR1047 GR1037	2 -	Hex Socket Plug W/O-Ring O-Ring
3	GR1044	3	7/16" Check Ball
4	GR1033	1	Detent Spring
5	GR1032 GR1045	2 -	Port Adapter W/O-Ring O-Ring
6	*G6400-06 GR1045	4 -	Connector W/O-Ring, 9/16"-18 Male 37° JIC To 9/16"-18 O-Ring O-Ring
7	GR1034 GR1035	1 -	Hex Socket Plug W/O-Ring O-Ring
8	GR1036	2	Spring
9	GR1043	2	1/4" Steel Ball
10	---	-	Spool **(Non-Stock Item)**
11	GR1041	2	Teflon BU Ring
12	GR1042	2	Adjustment Screw
13	GR1040	2	O-Ring
14	GR1046	2	Compression Spring
15	GR1039	2	Spring Pin
16	GR1038	2	Needle
17	GR1048	2	Hex Jam Nut, 1/2"-20
18	G10001 G11387 G10229	2 2 2	Hex Head Cap Screw, 3/8"-16 x 1" Washer, 3/8" SAE Lock Washer, 3/8"
19	G10001 G10229	2 2	Hex Head Cap Screw, 3/8"-16 x 1" Lock Washer, 3/8"
20	GD10223	1	Mounting Angle
21	G10001 G11387 G10229 G10101	2 2 2 2	Hex Head Cap Screw, 3/8"-16 x 1" Washer, 3/8" SAE Lock Washer, 3/8" Hex Nut, 3/8"-16
22	GD10224	1	Valve Mounting Angle
A	GA5552	-	Valve Assembly Complete (Items 1-17)
B	GA5572	-	Flow Control Portion Only (Items 11-17)

***Not used on sizes with 3/8" hoses.**

(PT12d/PT12e/PT13d)

Single Valve

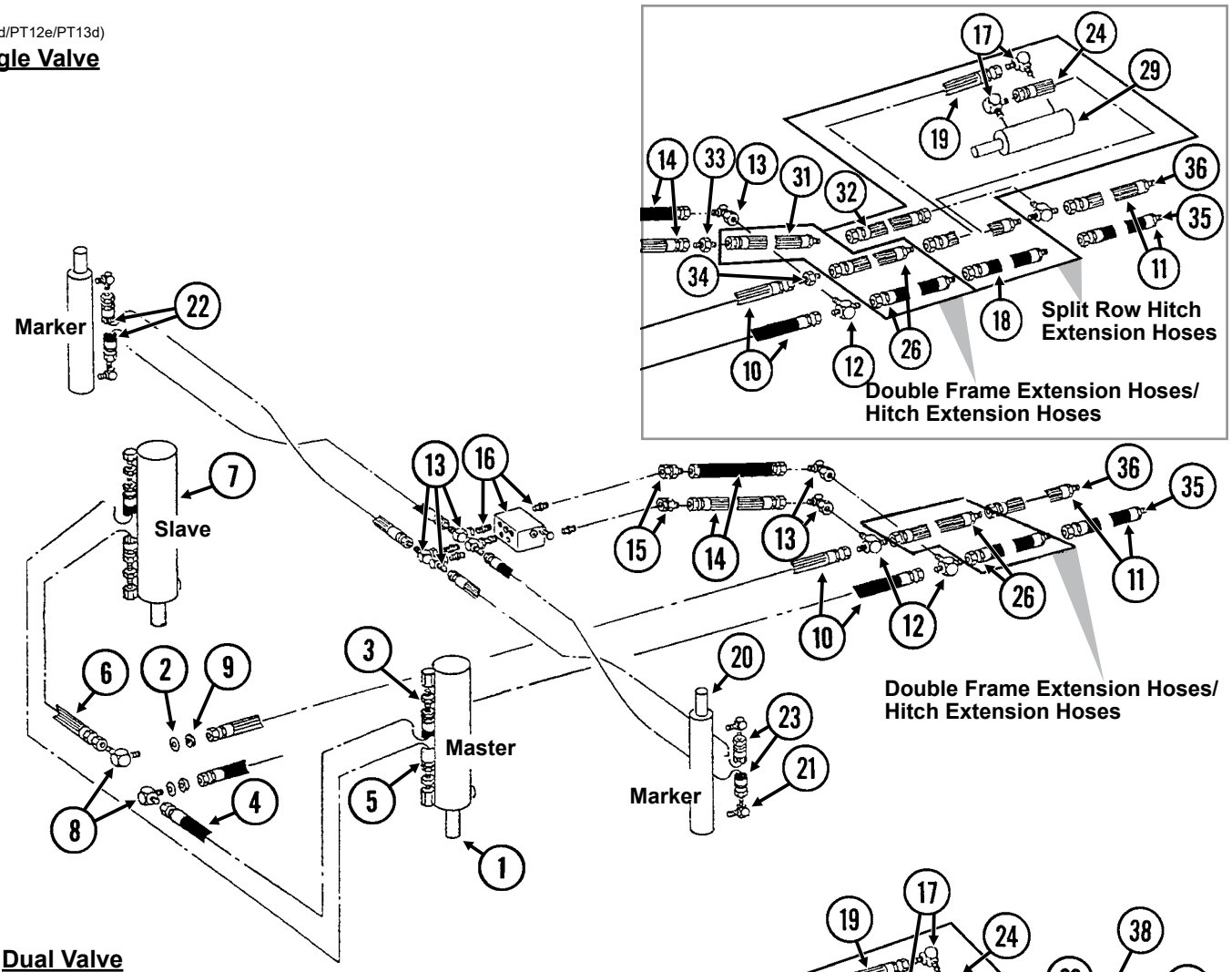

Dual Valve

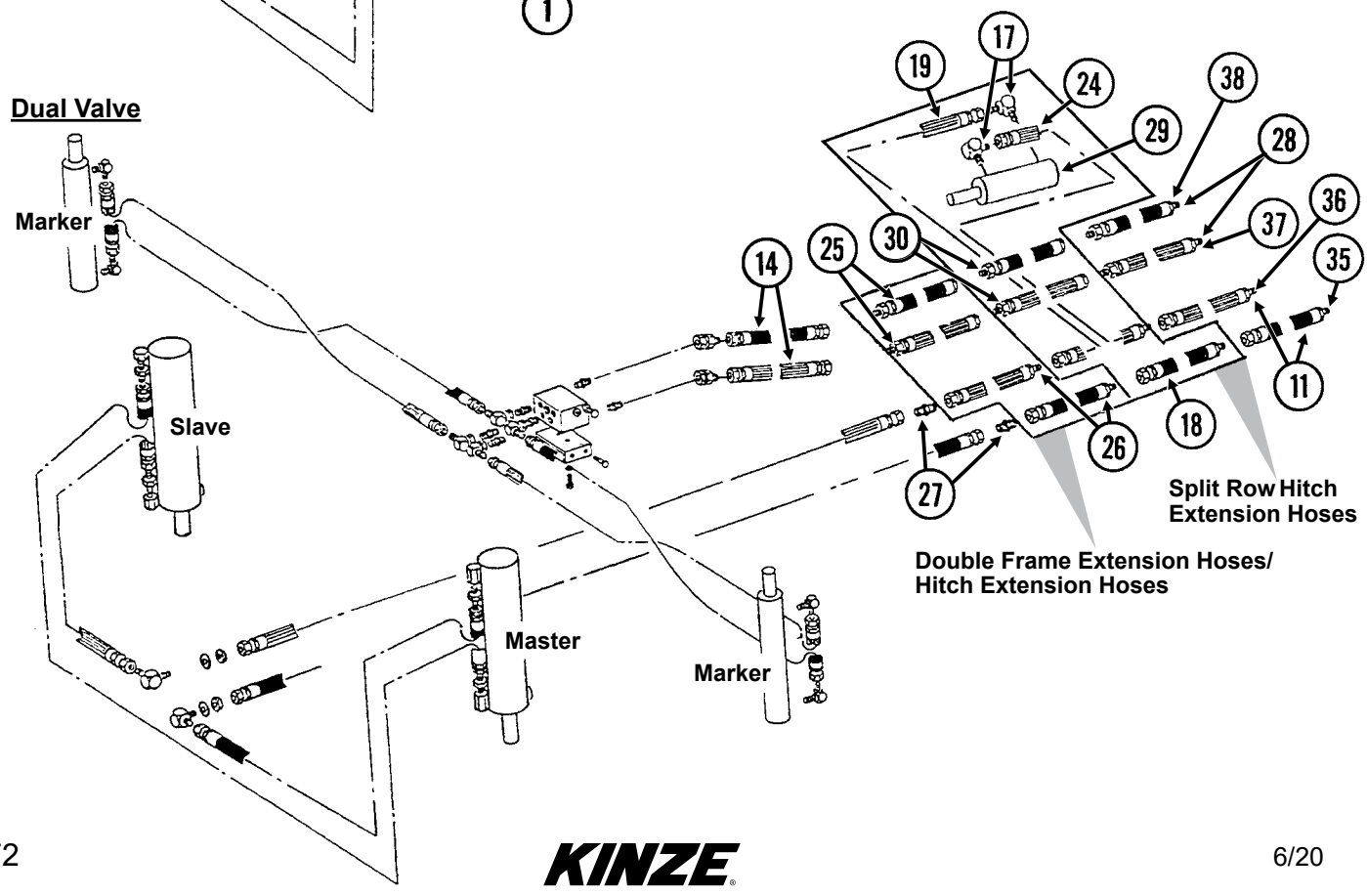

ITEM	PART NO.	QTY.	DESCRIPTION
1	---	-	See “Master Lift Cylinder” on page P63
2	G10215	2	Machine Bushing, ¾", 14 Gauge
3	G6400-08 GR1037	4 -	Connector W/O-Ring, ¾"-16 Male JIC To O-Ring O-Ring
4	*A1018	1	Hose Assembly, ⅜" x 40", 4 Row 30"
5	*A3113	1	Hose Assembly, ⅜" x 84", 4 Row 30"
6	*A1020	1	Hose Assembly, ⅜" x 48", 4 Row 30"
7	---	-	See “Slave Lift Cylinder” on page P64
8	G2701-08	2	Bulkhead Elbow, 90°, ¾"-16 Male JIC
9	G306-08	2	Lock Nut, ¾"-16
10	*A1076	2	Hose Assembly, ⅜" x 30"
11	*A26936-100	2	Hose Assembly, ⅜” x 100” (08F-1/2M NPTF W/Ext, W/Tip)
12	G2603-08-08-06	2	Tee, ¾"-16 Male JIC To 9⁄16"-18 JIC
13	G6500-06	-	Swivel Elbow, 90°, 9⁄16"-18 Male JIC To Female
14	*A1138	2	Hose Assembly, ¼" x 29"
15	G6502-06	2	Swivel Elbow, 45°, 9⁄16"-18 Male JIC To Female
16	---	-	See “Row Marker Sequencing/Flow Control Valve” on page P70
17	G6801-08 GR1037	2 -	Elbow W/O-Ring, 90°, ¾"-16 Male JIC To O-Ring O-Ring
18	*A3211	1	Hose Assembly, ⅜" x 66", W/Split Row Package
19	*A1020	1	Hose Assembly, ⅜" x 48", W/Split Row Package
20	---	-	See “Row Marker Cylinder, 4 Row 30” and 6 Row 30”” on page P66
21	G6801-06-08 GR1037	4 -	Elbow W/O-Ring, 90°, 9⁄16"-18 Male JIC To ¾"-16 O-Ring O-Ring
22	*A1102	2	Hose Assembly, ¼" x 95", 4 Row 30"
23	*A1170	2	Hose Assembly, ¼" x 90", 4 Row 30"
24	*A1076	1	Hose Assembly, ⅜" x 30", W/Split Row Package
25	*A1182 *A1177	- -	Hose Assembly, ¼" x 30", W/Double Frame Package Hose Assembly, ¼" x 24", W/Hitch Extensions
26	*A3142 *A3147	- -	Hose Assembly, ⅜" x 30", W/Double Frame Package Hose Assembly, ⅜" x 24", W/Hitch Extensions
27	G2403-08	2	Union, ¾"-16 Male JIC
28	*A7692-100	2	Hose Assembly, ¼” x 100” (06M-1/2M NPTF W/Ext, W/Tip)
29	---	-	See “Split Row Lift Cylinder” on page P68
30	*A1179	2	Hose Assembly, ¼" x 56", W/Split Row Package
31	*A1182	1	Hose Assembly, ¼" x 30", W/Double Frame Package
32	*A1153	1	Hose Assembly, ¼" x 56", W/Split Row Package
33	G2403-06	1	Union, 9⁄16"-18 Male JIC, W/Split Row Package
34	G2403-08	1	Union, ¾"-16 Male JIC, W/Split Row Package
35	GA26924-01	-	Hose Label/Cover, Red (Extend)
36	GA26924-02	-	Hose Label/Cover, Red (Retract)
37	GA26924-03	-	Hose Label/Cover, Blue (Extend)
38	GA26924-04	-	Hose Label/Cover, Blue (Retract)

*** Hydraulic hose is not stocked by Kinze Repair Parts.**

Single Valve

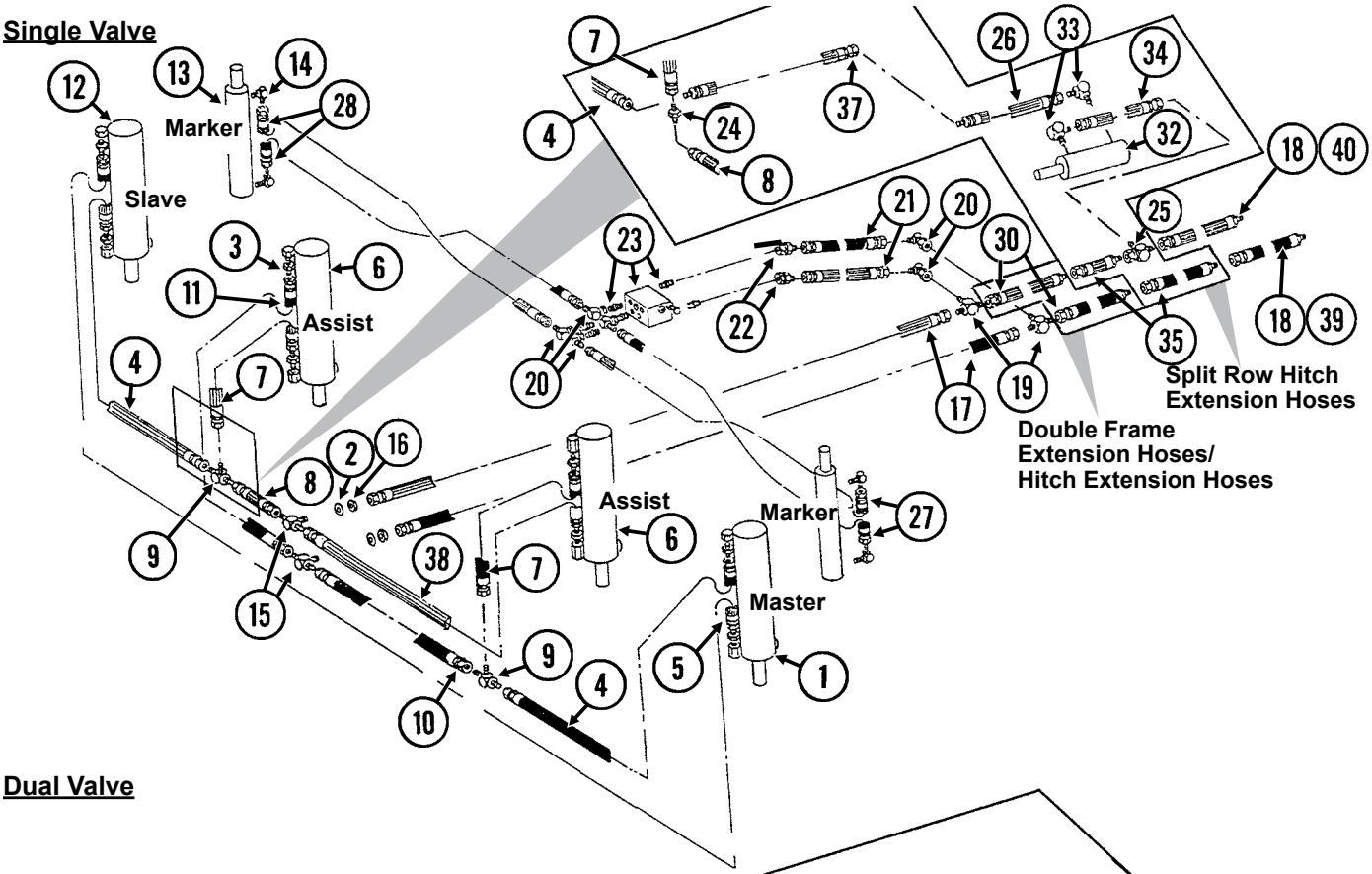

Dual Valve

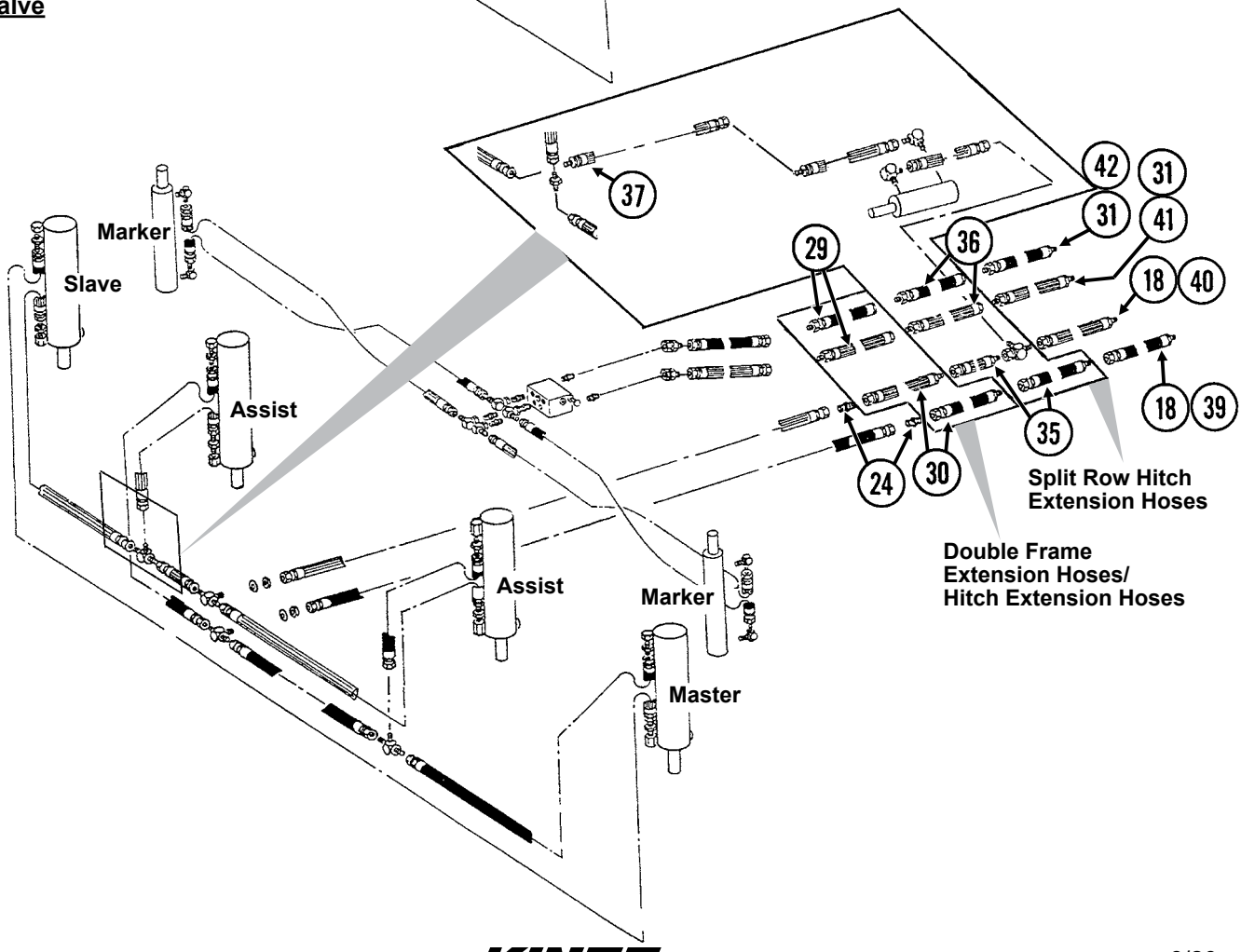

ITEM	PART NO.	QTY.	DESCRIPTION
1	---	-	See “Master Lift Cylinder” on page P63
2	G10215	2	Machine Bushing, ¾", 14 Gauge
3	G6400-08 GR1037	8 -	Connector W/O-Ring, ¾"-16 Male JIC To O-Ring O-Ring
4	*A1018	2	Hose Assembly, ⅜" x 40"
5	*A3115	1	Hose Assembly, ⅜" x 146"
6	---	-	See “Lift Assist Cylinder, 6 Row 30” and 8 Row 30”” on page P65
7	*A1000	2	Hose Assembly, ⅜" x 15"
8	*A3119	1	Hose Assembly, ⅜" x 36"
9	G2603-08	2	Tee, ¾"-16 Male JIC
10	*A1086	1	Hose Assembly, ⅜" x 28"
11	*A1019	1	Hose Assembly, ⅜" x 44"
12	---	-	See “Slave Lift Cylinder” on page P64
13	---	-	See “Row Marker Cylinder, 4 Row 30” and 6 Row 30”” on page P66
14	G6801-06-08 GR1037	4 -	Elbow W/O-Ring, 90°, 9⁄16"-18 Male JIC To ¾"-16 O-Ring O-Ring
15	G2703-08	2	Bulkhead Tee, ¾"-16 Male JIC
16	G306-08	2	Lock Nut, ¾"-16
17	*A1076	2	Hose Assembly, ⅜" x 30"
18	*A26936-100	2	Hose Assembly, ⅜” x 100” (08F-1/2M NPTF W/Ext, W/Tip)
19	G2603-08-08-06	2	Tee, ¾"-16 Male JIC To 9⁄16"-18 JIC
20	G6500-06	2	Swivel Elbow, 90°, 9⁄16"-18 Male JIC To Female
21	*A1138	2	Hose Assembly, ¼" x 29"
22	G6502-06	2	Swivel Elbow, 45°, 9⁄16"-18 Male JIC To Female
23	---	-	See “Row Marker Sequencing/Flow Control Valve” on page P70
24	G2403-08	1	Union, ¾"-16 Male JIC
25	G6602-08	1	Swivel Tee, ¾"-16 JIC
26	*A3208	1	Hose Assembly, ⅜" x 140", W/Split Row Package
27	*A1168	2	Hose Assembly, ¼" x 120"
28	*A1105	2	Hose Assembly, ¼" x 125"
29	*A1182 *A1177	- -	Hose Assembly, ¼" x 30", W/Double Frame Package Hose Assembly, ¼" x 24", W/Hitch Extensions
30	*A3142 *A3147	- -	Hose Assembly, ⅜" x 30", W/Double Frame Package Hose Assembly, ⅜" x 24", W/Hitch Extensions
31	*A7692-100	2	Hose Assembly, ¼” x 100” (06M-1/2M NPTF W/Ext, W/Tip)
32	---	-	See “Split Row Lift Cylinder” on page P68
33	G6801-08 GR1037	2 -	Elbow W/O-Ring, 90°, ¾"-16 Male JIC To O-Ring O-Ring
34	*A1076	1	Hose Assembly, ⅜" x 30", W/Split Row Package
35	*A3150	2	Hose Assembly, ⅜" x 56", W/Split Row Package
36	*A1179	2	Hose Assembly, ¼" x 56", W/Split Row Package
37	*A3142	1	Hose Assembly, ⅜" x 30", W/Split Row Package (Double Frame Only)
38	*A3175	1	Hose Assembly, ⅜" x 38"
39	GA26924-01	-	Hose Label/Cover, Red (Extend)
40	GA26924-02	-	Hose Label/Cover, Red (Retract)
41	GA26924-03	-	Hose Label/Cover, Blue (Extend)
42	GA26924-04	-	Hose Label/Cover, Blue (Retract)

*** Hydraulic hose is not stocked by Kinze Repair Parts.**

Single Valve

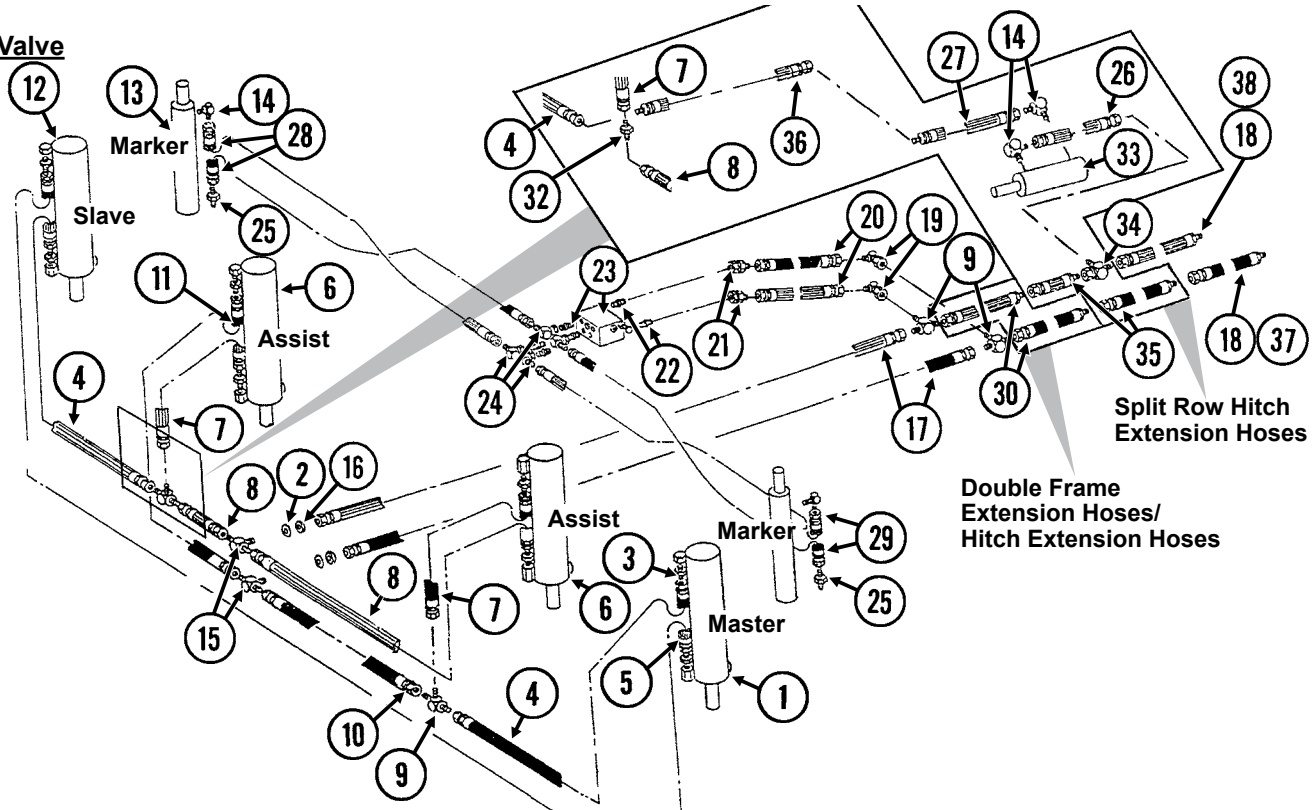

Dual Valve

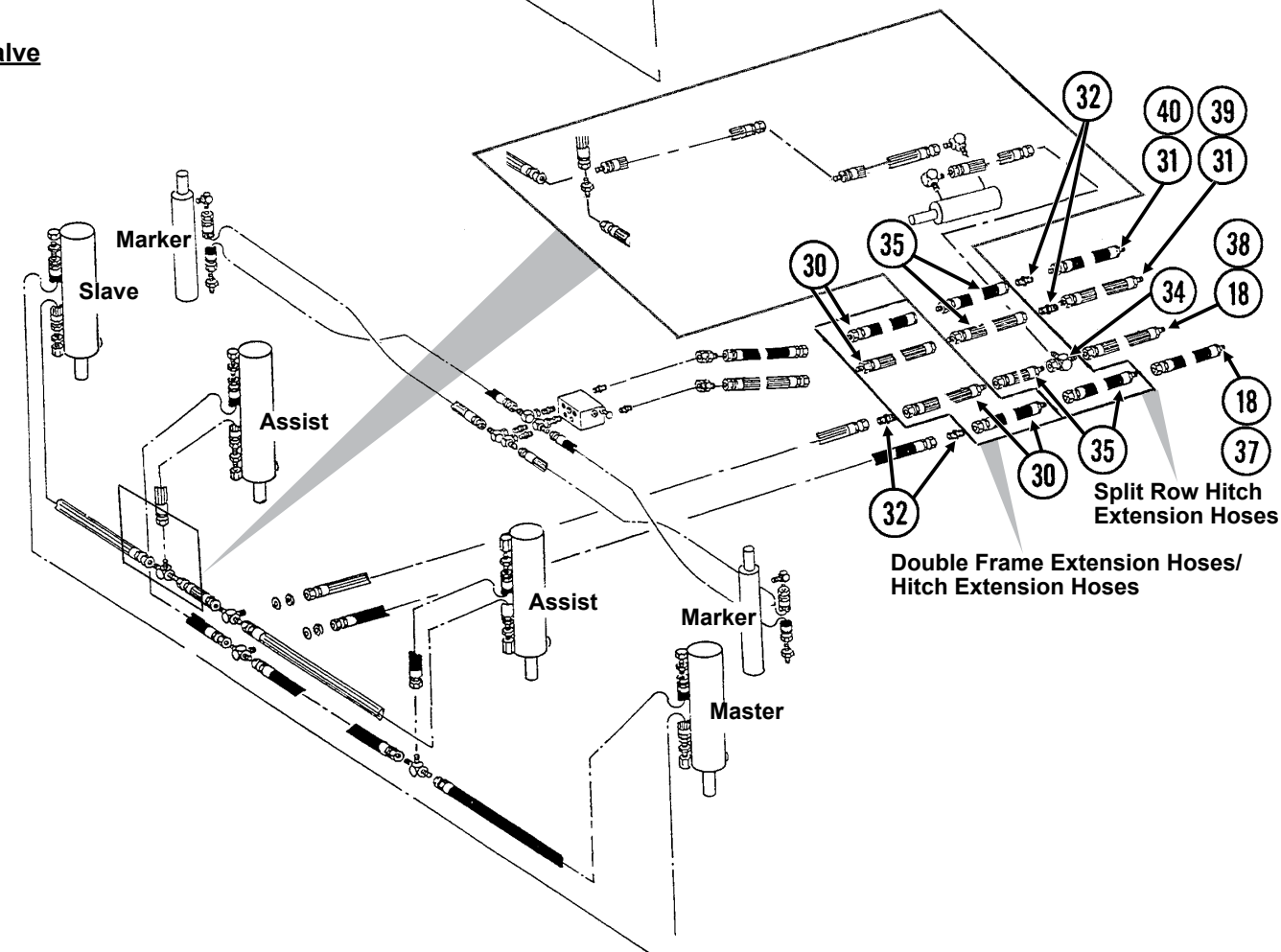

ITEM	PART NO.	QTY.	DESCRIPTION
1	---	-	See “Master Lift Cylinder” on page P63
2	G10215	2	Machine Bushing, ¾", 14 Gauge
3	G6400-08 GR1037	8 -	Connector W/O-Ring, ¾"-16 Male JIC To O-Ring O-Ring
4	*A1018	2	Hose Assembly, ⅜" x 40", 8 Row 30"
5	*A1054	1	Hose Assembly, ⅜" x 204", 8 Row 30"
6	---	-	See “Lift Assist Cylinder, 6 Row 30” and 8 Row 30”” on page P65
7	*A1000	2	Hose Assembly, ⅜" x 15"
8	*A1055	2	Hose Assembly, ⅜" x 66", 8 Row 30"
9	G2603-08	2	Tee, ¾"-16 Male JIC
10	*A1021	1	Hose Assembly, ⅜" x 56", 8 Row 30"
11	*A1039	1	Hose Assembly, ⅜" x 76", 8 Row 30"
12	---	-	See “Slave Lift Cylinder” on page P64
13	---	-	See “Row Marker Cylinder, 8 Row 30”” on page P67
14	G6801-08 GR1037	2 -	Elbow W/O-Ring, 90°, ¾"-16 Male JIC To O-Ring O-Ring
15	G2703-08	2	Bulkhead Tee, ¾"-16 Male JIC
16	G306-08	2	Lock Nut, ¾"-16
17	*A1076	2	Hose Assembly, ⅜" x 30"
18	*A26936-100	2	Hose Assembly, 3/8” x 100” (08F-1/2M NPTF W/Ext, W/Tip)
19	G6500-08	2	Swivel Elbow, 90°, ¾"-16 Male JIC To Female
20	*A1079	2	Hose Assembly, ⅜" x 24"
21	G6502-08	2	Swivel Elbow, 45°, ¾"-16 Male JIC To Female
22	G6400-08-06 GR1045	2 -	Connector W/O-Ring, ¾"-16 Male JIC To 9⁄16"-18 O-Ring O-Ring
23	---	-	See “Row Marker Sequencing/Flow Control Valve” on page P70
24	G6500-08-06	2	Swivel Elbow, 90°, ¾"-16 Male JIC To 9⁄16"-18 Female
25	G6400-08 GR1037 G6400-08-04 GR1465	2 - - -	Connector W/O-Ring, ¾"-16 Male JIC To O-Ring O-Ring Connector W/O-Ring, ¾"-16 Male JIC To 7⁄16"-20 O-Ring O-Ring
26	*A1076	1	Hose Assembly, ⅜" x 30", W/Split Row Package
27	*A3209	1	Hose Assembly, ⅜" x 170", W/Split Row Package, 8 Row 30"
28	*A1090	2	Hose Assembly, ⅜" x 162", 8 Row 30"
29	*A3114	2	Hose Assembly, ⅜" x 156", 8 Row 30"
30	*A3142 *A3147	- -	Hose Assembly, ⅜" x 30", W/Double Frame Package Hose Assembly, ⅜" x 24", W/Hitch Extensions
31	*A26947-100	2	Hose Assembly, ¼” x 100” (08M JIC - 1/2M NPTF W/Ext, W/Tip)
32	G2403-08	-	Union, ¾"-16 Male JIC
33	---	-	See “Split Row Lift Cylinder” on page P68
34	G6602-08	1	Swivel Tee, ¾"-16 JIC
35	*A3150	2-4	Hose Assembly, ⅜" x 56", W/Split Row Package
36	*A3142	1	Hose Assembly, ⅜" x 30", W/Split Row Package (Double Frame Only)
37	GA26924-01	-	Hose Label/Cover, Red (Extend)
38	GA26924-02	-	Hose Label/Cover, Red (Retract)
39	GA26924-03	-	Hose Label/Cover, Blue (Extend)
40	GA26924-04	-	Hose Label/Cover, Blue (Retract)

*** Hydraulic hose is not stocked by Kinze Repair Parts.**

This page left blank intentionally.

PFA052/PFA055(ELC9/A9206a/MTR27a/ELC8/PT49f)

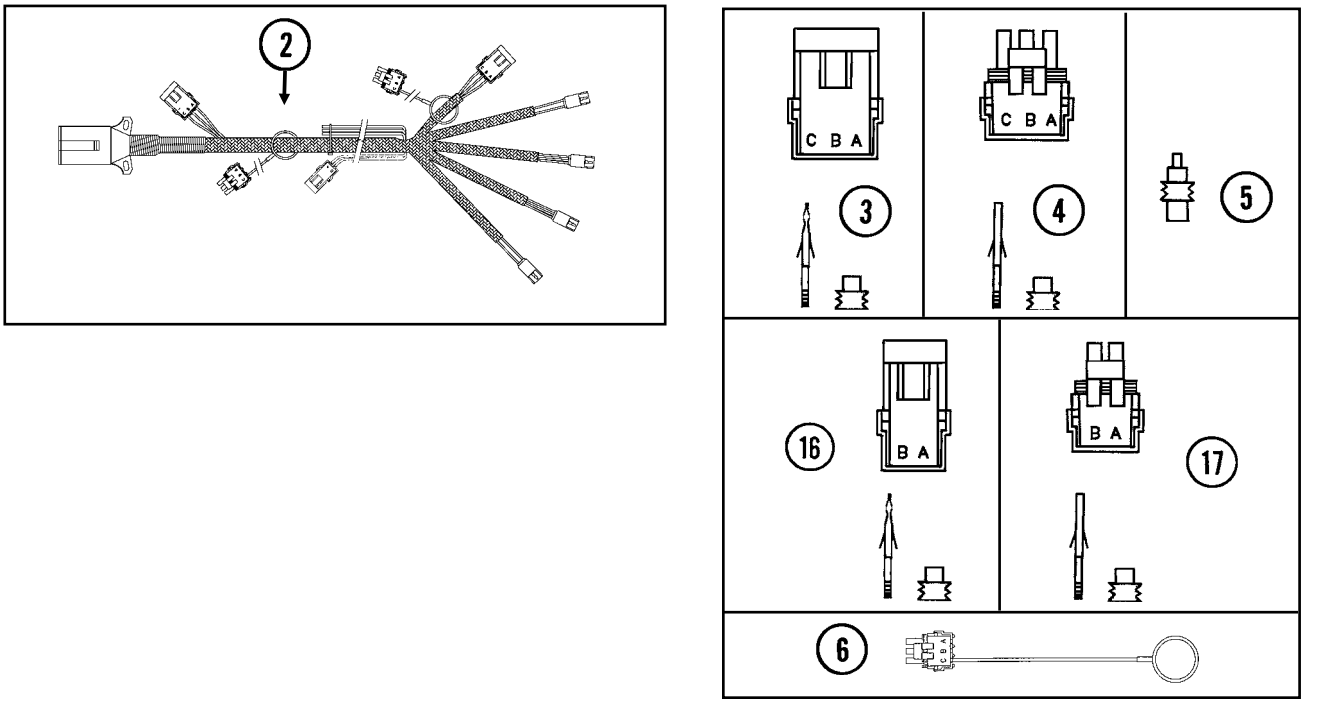

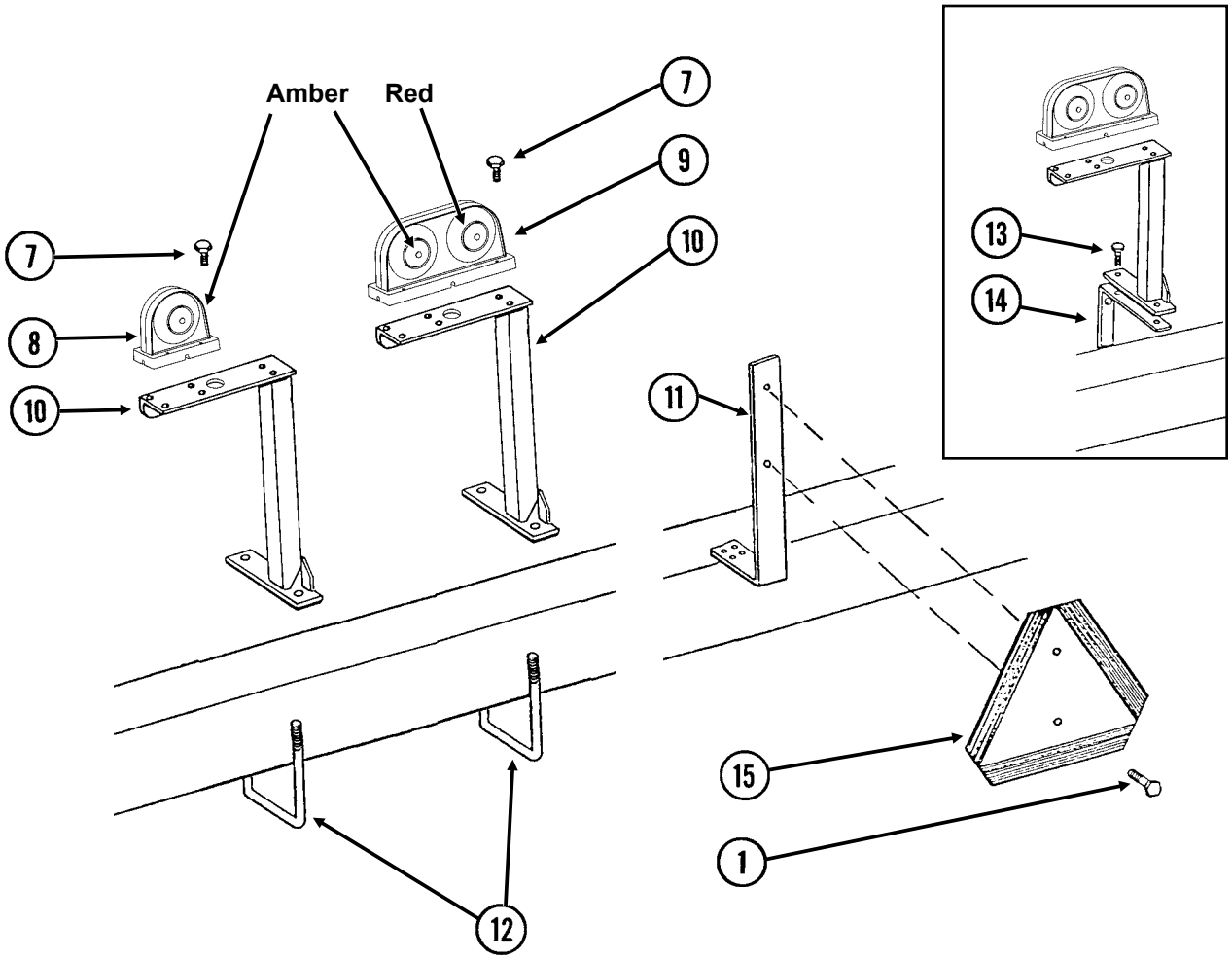

ITEM	PART NO.	QTY.	DESCRIPTION
1	G10023 G10110	2 2	Hex Head Cap Screw, ¼"-20 x ¾" Lock Nut, ¼"-20, Grade B
2	GA9207 GA9206 GA5385	- - -	Wiring Harness W/7 Terminal Female Connector, 329", 4 Row 30" and 6 Row 30" (4 Light Connections) Wiring Harness W/7 Terminal Female Connector, 396", 8 Row 30" (4 Light Connections) 7 Terminal Female Connector
3	G1K248	-	3-Pin Female Connector Kit (Black), Includes: (3) 3-Pin Female Housings, (9) Pin Contacts, (9) Seals
4	G1K252	-	3-Pin Male Connector Kit (Black), Includes: (3) 3-Pin Male Housings, (9) Socket Contacts, (9) Seals
5	GD11089	-	Sealing Plug
6	GA8047	-	Dust Plug (Black)
7	G10064 G11385 G10110	8-16 8-16 8-16	Hex Head Cap Screw, ¼"-20 x 1" Flat Washer, ¼" SAE Lock Nut, ¼"-20, Grade B
8	GA6701 GR1956 GR1208	1 - -	Single Amber Light Assembly Amber Lens Kit, Includes: (1) Amber Lens, (1) Gasket, and (3) Hex Head Cap Screws (Included W/GA6701) Bulb (Included W/GA6701)
9	GA6699 GA6700 GR1956 GR1957 GR1958 GR1208	1 1 - - - -	Double Light Assembly Double Light Assembly (Shown) Amber Lens Kit, Includes: (1) Amber Lens, (1) Gasket, and (3) Hex Head Cap Screws (Included W/GA6699 or GA6700) Red Lens Kit, Includes: (1) Red Lens, (1) Gasket, and (3) Hex Head Cap Screws (Included W/GA6699 or GA6700) Black Cover Kit, Includes: (1) Black Cover, (1) Gasket, and (3) Hex Head Cap Screws (Included W/GA6699 or GA6700) Bulb
10	GA6823 GA6824	1 1	Bracket, L.H. (Shown) Bracket, R.H.
11	GD7152	1	Bracket
12	GD7145 G10228 G10102	2-4 4-8 4-8	U-Bolt, 7" x 7" x ½"-13 Lock Washer, ½" Hex Nut, ½"-13
13	G10039 G10228 G10102	- - -	Hex Head Cap Screw, ½"-13 x 1¾" Lock Washer, ½" Hex Nut, ½"-13
14	GD8304	-	Bracket (Used To Mount Light Bracket When HD Single Disc Fertilizer Openers Are Used)
15	GD2199	1	SMV Sign
16	G1K321	-	2-Pin Female Connector Kit (Black), Includes: (3) 2-Pin Female Housings, (6) Pin Contacts, (6) Seals
17	G1K320	-	2-Pin Male Connector Kit (Black), Includes: (3) 2-Pin Male Housings, (6) Socket Contacts, (6) Seals

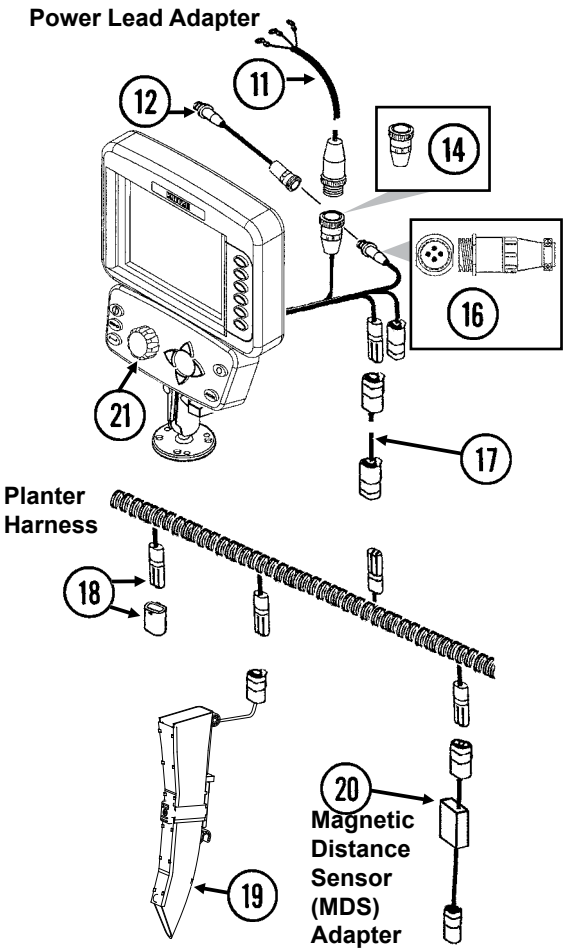
Power Lead Adapter
11
12
14
16
21
17
Planter Harness
18
19
20
Magnetic Distance Sensor (MDS) Adapter

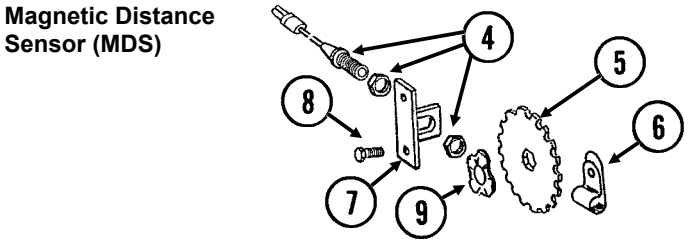
Magnetic Distance Sensor (MDS)
4
5
8
6
7
9

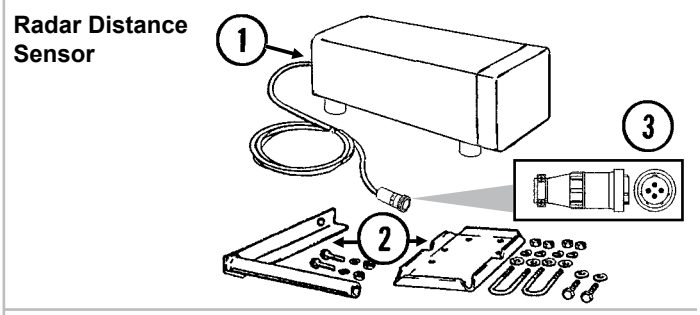
Radar Distance Sensor
1
3
2

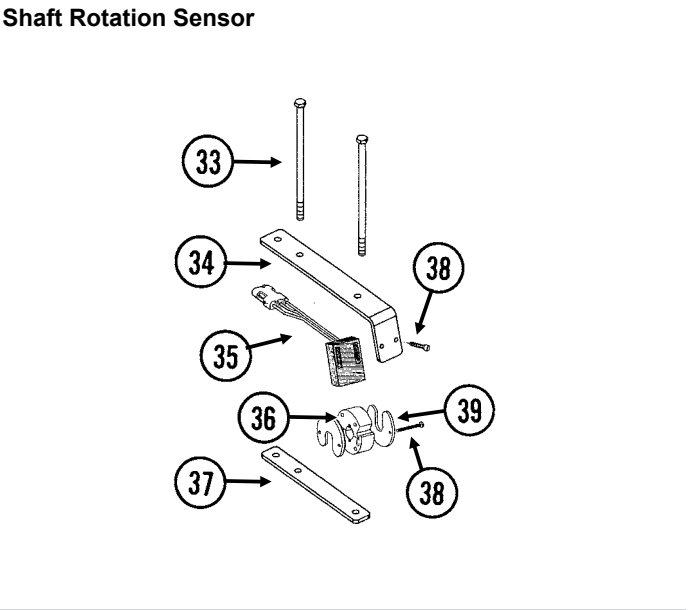
Shaft Rotation Sensor
33
34
38
35
36
39
37
38

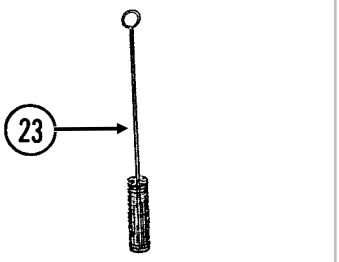
23

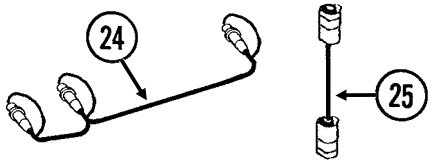
24
25
Radar Y-Cable
Adapter Harness

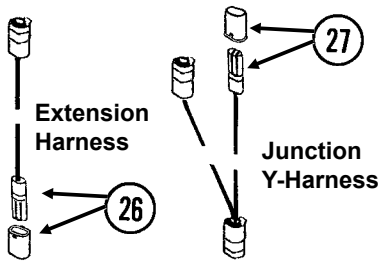
27
Extension Harness
Junction Y-Harness
26

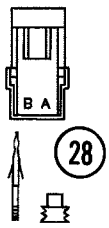
B A
28

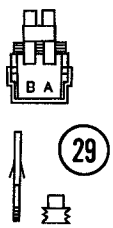
B A
29

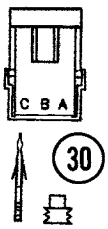
C B A
30

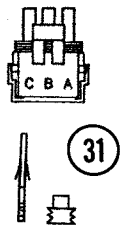
C B A
31

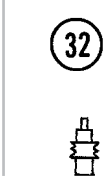
32

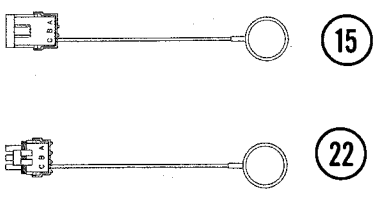
15
22

ITEM	PART NO.	QTY.	DESCRIPTION
1	GA7858	-	Radar Distance Sensor W/20' Cable
2	GA8026	-	Radar Sensor Pipe/Mounting Bracket Package
3	G1K323	-	4-Pin Connector Kit W/Female Housing, Includes: (4) Pins and (1) Cable Clamp
4	GA5600	1	Magnetic Distance Sensor
5	GD8751	-	Magnetic Distance Sensor Pulse Wheel
6	GD13348	-	Insulated Clamp, 11/16"
7	GD8770	1	Bracket
8	G10001 G10229 G10101	2 2 2	Hex Head Cap Screw, ⅜"-16 x 1" Lock Washer, ⅜" Hex Nut, ⅜"-16
9	GD8771	1	Spring Wave Washer
10	---	---	---
11	GA17547	1	Power Adapter Cable
12	GA9144	-	Monitor/Radar Adapter Cable, 10"
13	---	---	---
14	G1K268	-	Console Cable Connector Kit, Includes: (1) Cable Clamp, (1) 3-Pin Connector, (1) Lock Ring, (3) Female Terminal Pins
15	GA8046 GA9978	- -	Dust Plug (Black) Dust Plug (Blue)
16	G1K322	-	4-Pin Connector Kit W/Male Housing, (4) Female Socket Contacts and (1) Cable Clamp
17	---	-	Included In Planter Wiring Harness, See Item 2, on page P79
18	GA8021 GA8022 GA7850 GB1090	- - - -	Planter Harness W/Dust Caps, 4 Row (7 Connectors) Planter Harness W/Dust Caps, 6 Row (9 Connectors) (6 Row Mechanical) Planter Harness W/Dust Caps, 8 Row (12 Connectors) (6 Row Vacuum, 8 Row Mechanical/Vacuum) Dust Cap (Included W/GA8021, GA8022, and GA7850)
19	GA21515 GA20902	- -	Seed Tube W/Computerized Sensor Seed Tube (With Holes For Sensor Installation) (Included W/GA21515)
20	GA7859	1	Magnetic Distance Sensor Adapter (Analog To Digital)
21	G8647x GA12403 GR1762 GA16082	1 - - -	KPM III Backlit Console W/Brush (Item 23), Dust Plug (Item 15), Console Mounting Bracket Hardware and Power Harness Mounting Bracket Assembly, Includes: (2) Mounting Brackets, (2) Connector Halves, (1) Compression Spring, (1) Tension Knob, (1) ¼"-20 x 1¾" Hex Head Cap Screw, (1) ¼" Plastic Washer, (1) ¼" Steel Washer Console Mounting Bracket Hardware Package, Includes: (3) No. 10-32 x ⅝" Hex Socket Pan Head Plated Screw, (3) ¼" Plated Lock Washers (Included W/G8647X) Power Harness (Included W/G8647X)
22	GA8047 GA9979	- -	Dust Plug (Black) Dust Plug (Blue)
23	GR0594	-	Brush
24	GR0586	1	Radar Y-Cable (Used To Connect Radar Distance Sensor For Multiple
25	GA7857	-	Adapter Harness, 1'
26	GA7854 GA7855 GB1090	- - -	Extension Harness W/Dust Cap, 15' Extension Harness W/Dust Cap, 30' Dust Cap (Included W/GA7854 and GA7855)
27	GA7853 GB1090	- -	Junction Y-Harness W/Dust Cap Dust Cap (Included W/GA7853)
28	G1K321	-	2-Pin Female Connector Kit (Black), Includes: (3) 2-Pin Female Housings, (6) Pin Contacts, (6) Seals
29	G1K320	-	2-Pin Male Connector Kit (Black), Includes: (3) 2-Pin Male Housings, (6) Socket Contacts, (6) Seals

ITEM	PART NO.	QTY.	DESCRIPTION
30	G1K248	-	3-Pin Female Connector Kit (Black), Includes: (3) 3-Pin Female Housings, (9) Pin Contacts, (9) Seals
	G1K362	-	3-Pin Female Connector Kit (Blue), Includes: (3) 3-Pin Female Housings, (9) Pin Contacts, (9) Seals
31	G1K252	-	3-Pin Male Connector Kit (Black), Includes: (3) 3-Pin Male Housings, (9) Pin Contacts, (9) Seals
	G1K363	-	3-Pin Male Connector Kit (Blue), Includes: (3) 3-Pin Male Housings, (9) Pin Contacts, (9) Seals
32	GD11089	-	Sealing Plug
33	G10229401	4	Hex Head Cap Screw, ⅜"-16 x 8½", Grade 5
	G11387	2	Flat Washer, ⅜" SAE
	G10108	4	Lock Nut, ⅜"-16
34	GD18118	2	Shaft Sensor Mount
35	GR1415	1	Rotation Sensor
36	GR1414	1	Actuator
37	GD18168	2	Mount
38	G11960	8	Phillips Pan Head Machine Screw, No. 8-32 x 1½", Staninless Steel
	G11961	8	Flat Washer, No. 8
	G11202	8	Lock Nut W/Nylon Insert, No. 8-32, Stainless Steel
39	GD11474	2	Cover
A	GA6147	-	Magnetic Distance Sensor and Mounting Package (Items 4-9)
B	GR1763	-	KPM III Loaner (Display Only)
C	GA13521	-	Shaft Sensor Mounting Pkg. (Items 33, 34, and 37-40)
D	GA13522	-	Shaft Rotation Sensor (1 Sensor, 1 Actuator) (Items 35 and 36)

This page left blank intentionally.

FOC016/FOC007/FOC019(PT27c/FRTZ208)

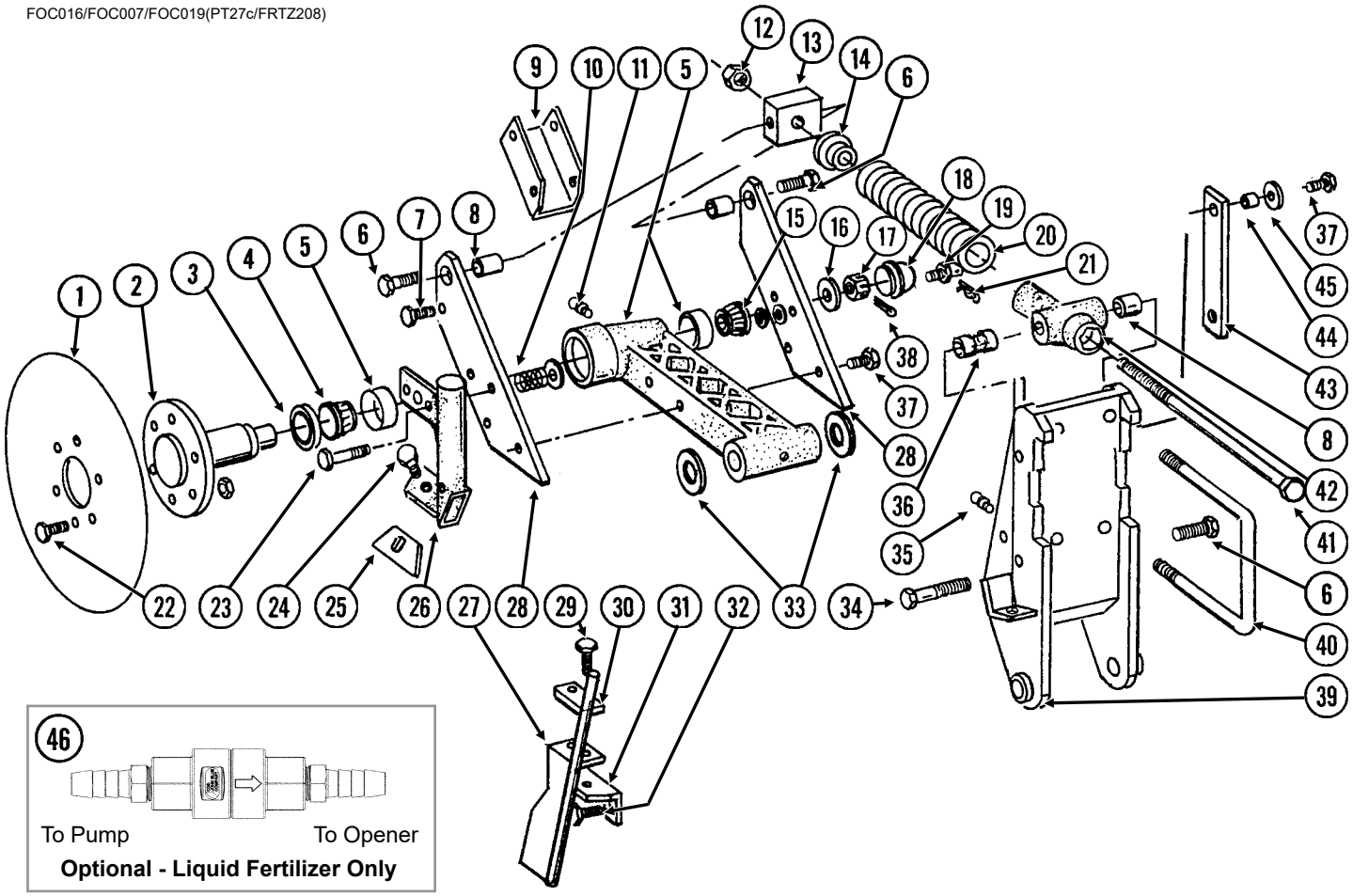

ITEM	PART NO.	QTY. (Per Assy.)	DESCRIPTION
1	GD7900	1	Disc Blade, 18"
	GD8247	-	Disc Blade, 20" (Optional)
2	GB0205	1	Spindle
3	GA4286	1	Seal
4	GA4287	1	Bearing
5	GA5887	1	Arm W/Cups and Washers
	GD6553	-	Inner Cup (Included W/GA5887)
	GR0188	-	Outer Cup (Included W/GA5887)
	G11391	3	Flat Washer, ⅝" SAE (Included W/GA5887)
6	G10007	3	Hex Head Cap Screw, ⅝"-11 x 1½"
7	G10001	2	Hex Head Cap Screw, ⅜"-16 x 1"
	G10108	2	Lock Nut, ⅜"-16
8	GB0218	3	Bushing, 21⁄32" I.D. x ⅞" O.D. x 19⁄32" Long
9	GD8238	1	Channel
10	GD7962	2	Spring
11	G10641	2	Grease Fitting, ⅛" NPT
12	G10105	3	Hex Nut, ¾"-10
13	GD7908	1	Tap Block
14	GD34923	1	Spring Seat
15	GA0237	1	Bearing
16	G10220	1	Machine Bushing, 1 1⁄16", 10 Gauge

ITEM	PART NO.	QTY. (Per Assy.)	DESCRIPTION
17	G10507	1	Slotted Nut, 1"-14
18	GD1104	1	Dust Cap
19	GD8276	1	Pin
	G10237	1	Lock Washer, 7⁄16"
	G10100	1	Hex Nut, 7⁄16"-14
20	GD10273	1	Compression Spring
21	G10592	1	Hair Pin Clip, No. 11
22	G10594	6	Bolt, ½"-13 x 1 ½"
	G10111	6	Lock Nut, ½"-13
23	G10049	2	Hex Head Cap Screw, ⅜"-16 x 2½"
	G11387	2	Flat Washer, ⅜" SAE
	G10108	2	Lock Nut, ⅜"-16
24	G10599	1	Carriage Bolt, ⅜"-16 x 1¼"
	G11387	1	Flat Washer, ⅜" SAE
	G10229	1	Lock Washer, ⅜"
	G10101	1	Hex Nut, ⅜"-16
25	GD7912	1	Scraper
26	GB0210	-	Drop Tube, R.H., Dry Fertilizer
	GB0209	1	Drop Tube, L.H., Dry Fertilizer (Shown)
27	GA8689	1	Drop Tube, L.H., Liquid Fertilizer (Shown)
	GA8688	-	Drop Tube, R.H., Liquid Fertilizer
28	GD8224	2	Bar
29	G10004	2	Hex Head Cap Screw, ⅜"-16 x 1¼"
	G10229	2	Lock Washer, ⅜"
30	GD10487	1	Clamp
31	GD10304	-	Angle, R.H.
	GD10303	1	Angle, L.H. (Shown)
32	G10016	2	Hex Head Cap Screw, ½"-13 x 2"
	G10111	2	Lock Nut, ½"-13
33	G10322	-	Machine Bushing, 1¼", 18 Gauge (As Required)
34	G10862	1	Hex Head Cap Screw, ⅝"-11 x 3¼"
	G11391	2	Flat Washer, ⅝" SAE
	G10230	1	Lock Washer, ⅝"
35	G10640	1	Grease Fitting, ¼"-28
36	GD10242	1	Bushing, 2¼"
37	G10039	5	Hex Head Cap Screw, ½"-13 x 1¾"
	G10111	5	Lock Nut, ½"-13
38	G10459	1	Cotter Pin, 3⁄16" x 1½"
39	GA7240	-	Opener Mount, R.H.
	GA7239	1	Opener Mount, L.H. (Shown)
40	GD1114	2	U-Bolt, 7" x 7" x ⅝"-11 (8½" Long)
	GD14559	-	U-Bolt, 7" x 7" x ⅝"-11 (9" Long)
	G10230	4	Lock Washer, ⅝"
	G10104	4	Hex Nut, ⅝"-11
41	GD7907	1	Special Bolt
42	GB0206	1	Rod Guide
43	GD8239	1	Storage Strap
44	GD7904-02	1	Sleeve, ½" x ½" Long
45	G11389	3	Flat Washer, ½" SAE
46	GA15416	-	Check Valve, Low Rate

FOC018(TWL34e/TWL34f/TWL34g/FRTZ268/FRTZ208)

NOTE: R.H. and L.H. is determined by which side of blade it is on in the direction of travel.

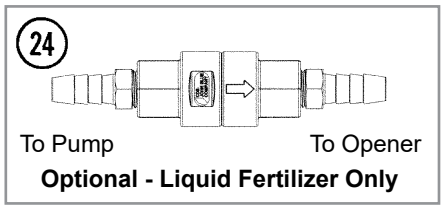

Optional - Liquid Fertilizer Only

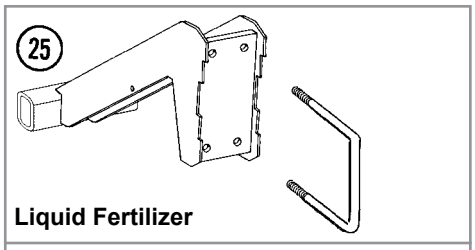

Liquid Fertilizer

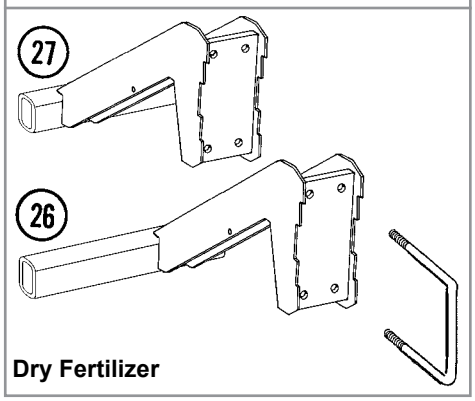

Dry Fertilizer

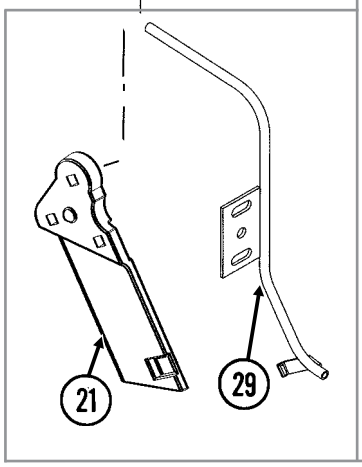

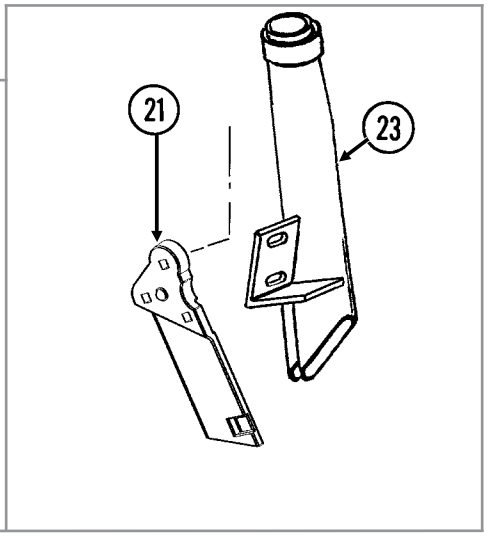

ITEM	PART NO.	QTY. (Per Assy.)	DESCRIPTION
1	G10017 G10102	3 3	Hex Head Cap Screw, ½"-13 x 1½" Hex Nut, ½"-13
2	GD12677	1	Washer, 1½" O.D., 7 Gauge, Hardened
3	GB0296	1	Arm, 13 ½"
4	G10640	1	Grease Fitting, ¼"-28
5	GD12685	1	Bushing, ¾" O.D. x ½" Long
6	GA6966	1	Compression Spring Assembly
7	G10047 G11387 G10108	1 2 1	Hex Head Cap Screw, ⅜"-16 x 1¾" Flat Washer, ⅜" SAE Lock Nut, ⅜"-16
8	GD1026	1	Sleeve, 1³⁄₁₆" Long
9	GA9433 GA9434	1 -	Pivot Arm, L.H. (Shown) Pivot Arm, R.H.
10	GD11557 GD11558	1 -	Scraper, L.H. (Shown) Scraper, R.H.
11	G10002	6	Hex Head Cap Screw, ⅜"-16 x ¾"
12	G10306 G10108	3 3	Carriage Bolt, ⅜"-16 x 2" Lock Nut, ⅜"-16
13	G10991 G10232 G11386	2 2 6	Hex Head Cap Screw, ⁵⁄₁₆"-18 x ⅞" Lock Washer, ⁵⁄₁₆" Flat Washer, ⁵⁄₁₆" SAE
14	GD12679	1	Stepped Spacer, 3" Long
15	GA9437 GA8603	1 -	Hub W/Bearing Bearing, Double Row (Included W/GA9437)
16	G10011	1	Hex Head Cap Screw, ⅝"-11 x 5½"
17	G10046	1	Hex Head Cap Screw, ⅝"-11 x 5"
18	GD12676	1	Disc Blade, Notched, 16¾"
19	G10871	1	Hex Head Cap Screw, ½"-13 x 6"
20	GD13287 G11389 G10111	2 4 4	U-Bolt, 1½" x 2½" x ½"-13 Flat Washer, ½" Plated SAE Lock Nut, ½"-13
21	GB0323 GB0322	1 -	Knife, L.H. (Shown) Knife, R.H.
22	---	---	---
23	GA10047 GA10048	1 -	Drop Tube, L.H., Dry Fertilizer Drop Tube, R.H., Dry Fertilizer (Shown)
24	GA15416	-	Check Valve, Low Rate
25	GA9564 GD1113 G10230 G10104	1 2 4 4	Opener Mount U-Bolt, 5" x 7" x ⅝"-11 Lock Washer, ⅝" Hex Nut, ⅝"-11
26	GA9819 GD1113 G10230 G10104	1 2 4 4	Opener Mount U-Bolt, 5" x 7" x ⅝"-11 Lock Washer, ⅝" Hex Nut, ⅝"-11
27	GA9820 GD1113 G10230 G10104	1 2 4 4	Opener Mount U-Bolt, 5" x 7" x ⅝"-11 Lock Washer, ⅝" Hex Nut, ⅝"-11
28	GB0405 GB0400	1 -	Mount, L.H. Mount, R.H. (Shown)
29	GA12108 GA12109	1 -	Drop Tube, Liquid Fertilizer (Shown) Drop Tube, Liquid Fertilizer
30	G11389	-	Flat Washer, ½" Plated SAE

Continued on next page.

ITEM	PART NO.	QTY. (Per Assy.)	DESCRIPTION
31	G10107	-	Lock Nut, ⅝"-11
32	G10111	-	Lock Nut, ½"-13
33	G11391	-	Flat Washer, ⅝" SAE
34	G10217	-	Washer, ⅝" USS
35	G10450	-	Machine Bushing, 1½", 18 Gauge (As Required)

This page left blank intentionally.

(FRTZ256)

FOR USE WITH NOTCHED SINGLE DISC FERTILIZER OPENER

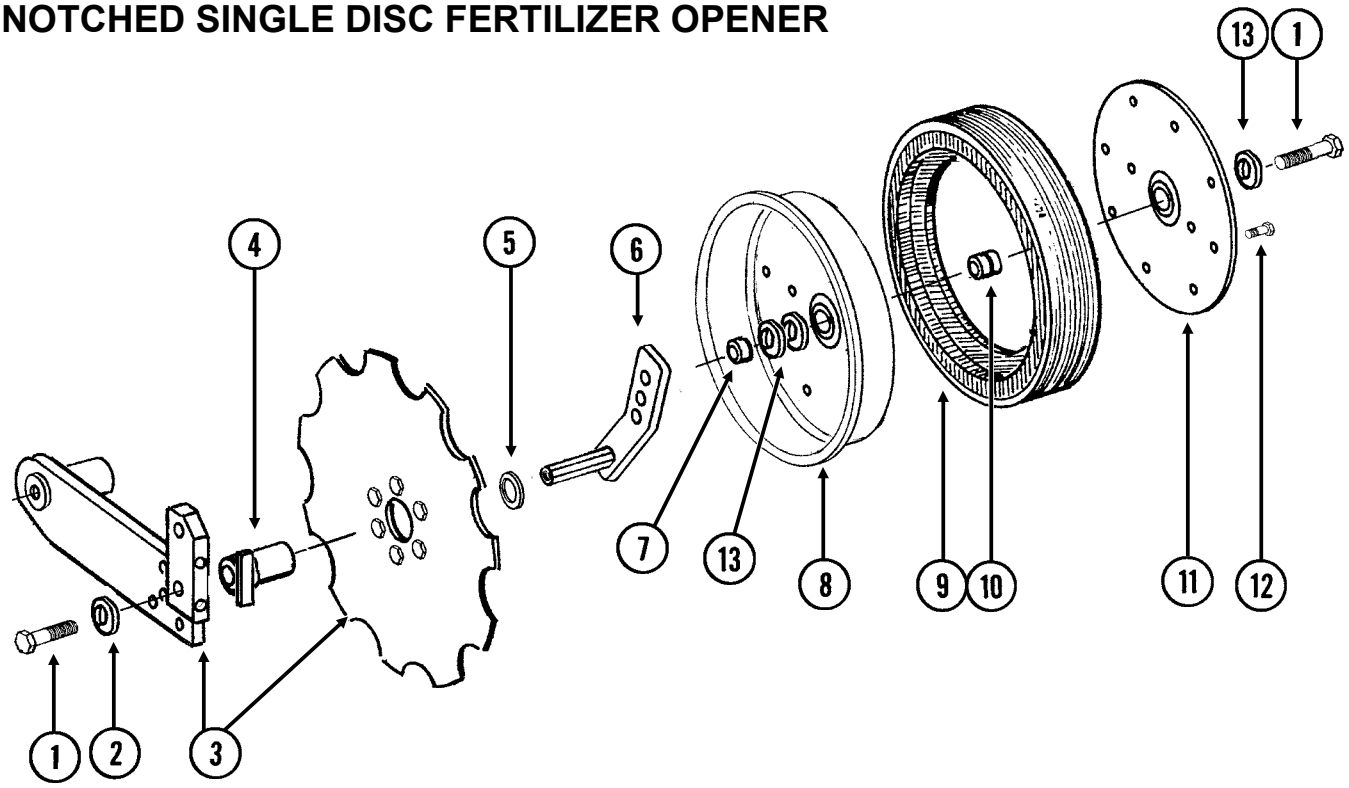

ITEM	PART NO.	QTY. (Per Assy.)	DESCRIPTION
1	G10010	2	Hex Head Cap Screw, ⅝"-11 x 3"
2	G11391	1	Flat Washer, ⅝" SAE
3	---	-	See “Notched Single Disc Fertilizer Opener” on page P87
4	GA9472	1	Blade Mount
5	G10233	1	Machine Bushing, 1", 10 Gauge
6	GA10037 GA10036	1 1	Wheel Mount, L.H. (Shown) Wheel Mount, R.H.
7	GD13309	1	Spacer
8	GD31466	1	Half Wheel
9	GD11953	1	Offset Tire
10	GA6171	1	Bearing
11	GD26598	1	Half Wheel Cover, Black
12	G10961 G10620	11 11	Flanged Whiz Lock Screw, 5⁄16"-18 x ¾", No Serration Serrated Flange Nut, 5⁄16"-18
13	G10204	-	Special Machine Bushing, ⅝" x 1" O.D. (As Required)
A	GA18311	-	Gauge Wheel Complete (Items 8-12)
B	G9881X	-	Depth/Gauge Wheel Package (Items 1-13)

FOC008(PT28)

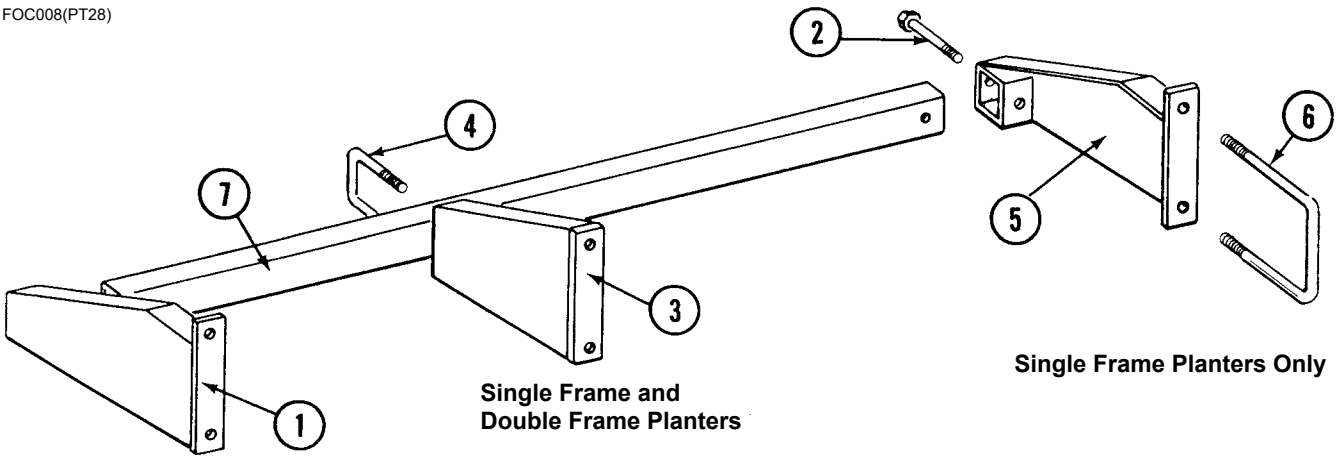

Single Frame and Double Frame Planters

Single Frame Planters Only

Single Frame Planters Only

ITEM	PART NO.	QTY.	DESCRIPTION
1	GA5231	1	Support, L.H., Single Frame Planters Only
2	G10035	2	Hex Head Cap Screw, ½"-13 x 4"
	G10228	2	Lock Washer, ½"
	G10102	2	Hex Nut, ½"-13
3	GA5237	1	Support,19" Long, L.H. (Shown), 8 Row 30" Single Frame Planters
	GA5236	1	Support,19" Long, R.H., 8 Row 30" Single Frame Planters
	GA9431	1	Support,18⅛" Long, L.H., 8 Row 30" Double Frame Planters
	GA9430	1	Support,18⅛" Long, R.H., 8 Row 30" Double Frame Planters
4	GD1138	2	U-Bolt, 2½" x 2½" x ½"-13
	G10228	4	Lock Washer, ½"
	G10102	4	Hex Nut, ½"-13
5	GA5230	1	Support, R.H., Single Frame Planters Only
6	GD1114	2	U-Bolt, 7" x 7" x ⅝"-11
	G10230	4	Lock Washer, ⅝"
	G10104	4	Hex Nut, ⅝"-11
7	GD1685-14	1	Toolbar, 2½" x 2½" x 105", 4 Row 30"
	GD1685-15	-	Toolbar, 2½" x 2½" x 129", 4 Row 36"/38"
	GD1685-13	-	Toolbar, 2½" x 2½" x 165", 6 Row 30"
	GD1685-12	-	Toolbar, 2½" x 2½" x 205", 6 Row 36"/38"
	GD1685-16	-	Toolbar, 2½" x 2½" x 225", 8 Row 30"
A	G6795X	-	Support Bundle (Items 1, 2, 4, 5 and 6)

(PT29f)

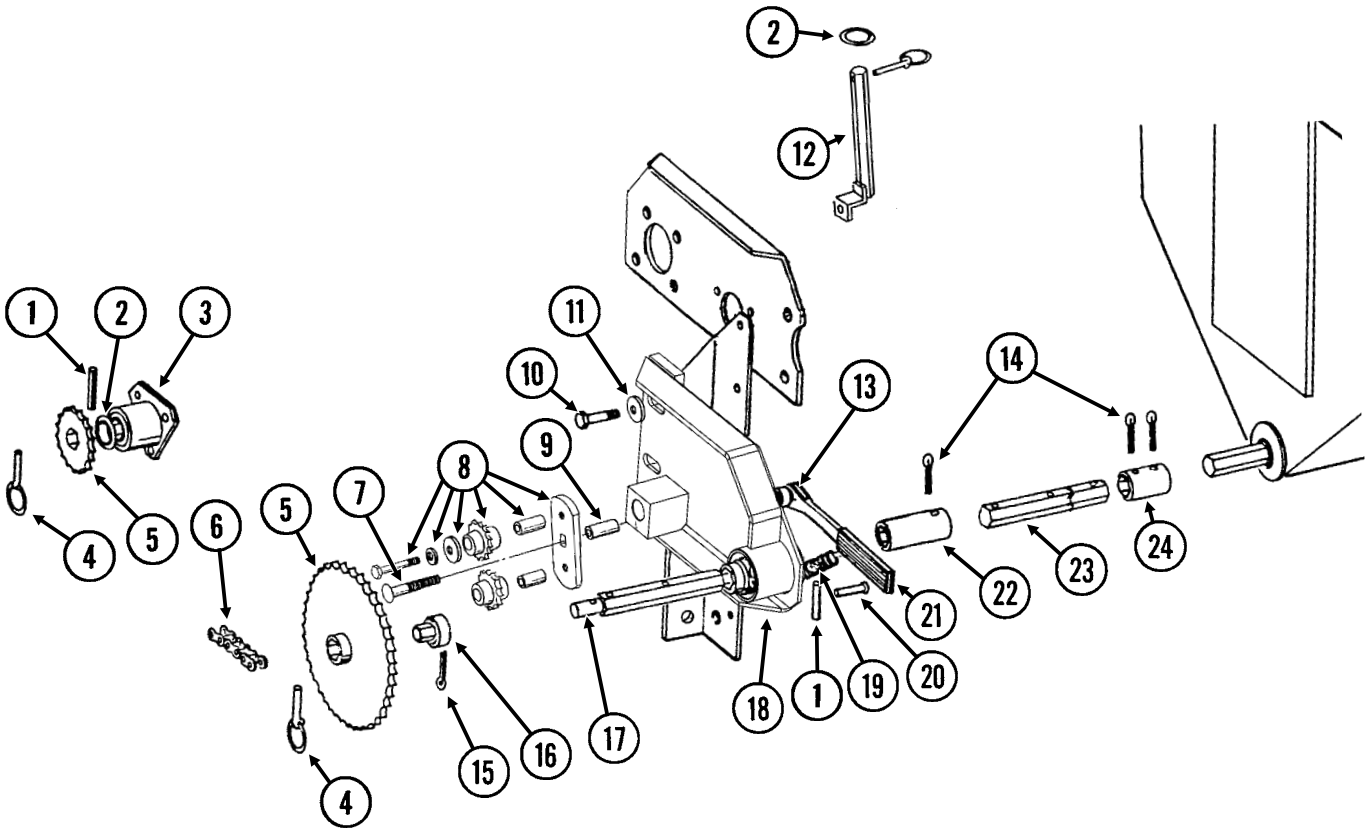

ITEM	PART NO.	QTY.	DESCRIPTION
1	G10602	2	Spring Pin, ¼" x 1½"
2	G10233	2	Machine Bushing, 1", 10 Gauge
3	GA5223	1	Spacer W/Bearing
	GA5116	-	Bearing, ⅞" Hex Bore, Cylindrical (Included W/GA5116)
4	GD2558	3	Lynch Pin, ¼"
5	GA5105	1	Sprocket, 15 Tooth
	GA5107	1	Sprocket, 19 Tooth
	GA5114	1	Sprocket, 30 Tooth
	GA5115	1	Sprocket, 33 Tooth
	GA6337	1	Sprocket, 35 Tooth
6	G3310-98	1	Chain, No. 40, 98 Pitch Including Connector Link
	GR0912	-	Connector Link, No. 40
7	G10419	1	Carriage Bolt, ½"-13 x 4½"
	G10111	1	Lock Nut, ½"-13
8	GA7336	1	Idler W/Bolt-On Sprockets
	GD7426	-	Sprocket, 12 Tooth (Included W/GA7336)
	GD1026	-	Sleeve, 1⅜" Long (Included W/GA7336)
	G11387	-	Flat Washer, ⅜" SAE (Included W/GA7336)
	G10229	-	Lock Washer, ⅜" (Included W/GA7336)
	G10047	-	Hex Head Cap Screw, ⅜"-16 x 1¾" (Included W/GA7336)
9	GD3180-17	1	Sleeve, ⅝" I.D. x ⅞" O.D. x 2⅝" Long
10	G10053	2	Hex Head Cap Screw, ½"-13 x 2½"
	G10585	1	Hex Head Cap Screw, ½"-13 x 3¼"
	G10033	1	Hex Head Cap Screw, ½"-13 x 3½"
	G10016	2	Hex Head Cap Screw, ½"-13 x 2"
	G10228	2	Lock Washer, ½"
	G10102	2	Hex Nut, ½"-13
11	G11389	2	Flat Washer, ½" Plated SAE
12	GA7313	1	Sprocket Storage Rod
13	GD10161	1	Spacer, ⅜"
14	G10460	-	Cotter Pin, ¼" x 2"
15	G10821	1	Clevis Pin, 3⁄16" x 2"
	G10455		Cotter Pin, 1⁄16" x ½"
16	GD7127	1	Shear Coupler
17	GD7870	1	Shaft, 7"
18	GA21798	1	Plate W/Bearings and Grease Fitting
	GA5116	-	Bearing, ⅞" Hex Bore, Cylindrical (Included W/GA21798)
	GA5624	-	Special Bearing, ⅞" Hex Bore x 1.6" (Included W/GA21798)
	G10640	-	Grease Fitting, ¼"-28 (Included W/GA21798)
19	GD5857	1	Spring
20	G10408	1	Clevis Pin, 5⁄16" x ¾"
	G10409	1	Retaining Ring, 5⁄16"
21	GA4235	1	Ratchet Arm W/Protective Closure
	G10445	-	Protective Closure
22	GD7867	-	Coupler, 3", 4 Row 36"/38" and 6 Row 36"/38" Only
23	GD7871	-	Hex Shaft, ⅞" x 6" (3 Holes), 4 Row 36"/38" and 6 Row 36"/38" Only
24	GD5886	-	Coupler, 1¾"

DFC009/DFC014/DFC018(PT30a)

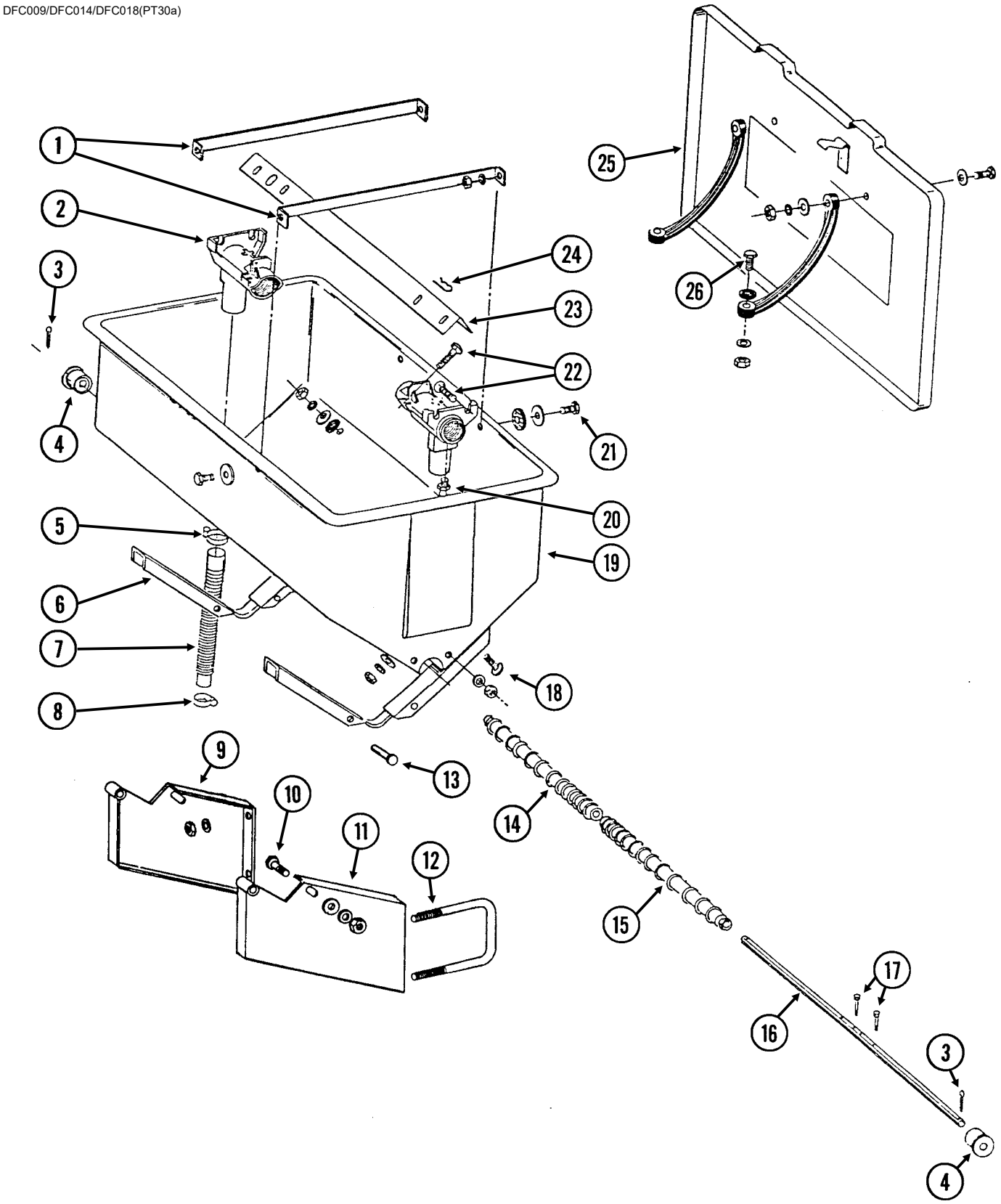

ITEM	PART NO.	QTY. (Per Hopper)	DESCRIPTION
1	GD1209	2	Strap
2	GD1200	2	Outlet Housing
3	G10460	2	Cotter Pin, ¼" x 2"
4	GB0200	2	Bearing
5	G10676	2	Hose Clamp, No. 36, Stainless Steel
6	GA5652	2	Saddle
7	GD21398	2	Rubber Tube
8	G10672	2	Hose Clamp, No. 28
9	GA0864	1	Hopper Mount, R.H.
10	G10037	2	Hex Head Cap Screw, ½"-13 x 1¼"
	G11389	2	Flat Washer, ½" SAE
	G10228	2	Lock Washer, ½"
	G10102	2	Hex Nut, ½"-13
11	GA0863	1	Hopper Mount, L.H.
12	GD1114	2	U-Bolt, 7" x 7" x ⅝"-11
	G10177	-	Hex Head Cap Screw, ⅝"-11 x 9½"
	G10230	4	Lock Washer, ⅝"
	G10104	4	Hex Nut, ⅝"-11
13	G10561	2	Clevis Pin, ½" x 3"
	G10451	2	Cotter Pin, ⅛" x 1"
14	GB0198	1	Auger, R.H.
15	GB0199	1	Auger, L.H.
16	GD7848	1	Shaft
17	G10587	2	Hex Head Cap Screw, ¼"-20 x 2", Stainless Steel
	G10588	2	Hex Nut, ¼"-20, Stainless Steel
18	G10303	8	Carriage Bolt, 5⁄16"-18 x 1"
	G10201	8	Special Washer, ⅜" x 1½" O.D.
	GD1213	8	Rubber Washer
	G10232	8	Lock Washer, 5⁄16"
	G10106	8	Hex Nut, 5⁄16"-18
19	GD1379	1	Hopper
20	G10640	2	Grease Fitting, ¼"-28
21	G10171	4	Hex Head Cap Screw, 5⁄16"-18 x 1¼"
	G10201	4	Special Washer, ⅜" x 1½" O.D.
	GD1213	4	Rubber Washer
	G10232	4	Lock Washer, 5⁄16"
	G10106	4	Hex Nut, 5⁄16"-18
22	G10303	8	Carriage Bolt, 5⁄16"-18 x 1"
	G11386	8	Flat Washer, 5⁄16" SAE
	G10232	8	Lock Washer, 5⁄16"
	G10106	8	Hex Nut, 5⁄16"-18
23	GD1207	1	Baffle
24	G10670	2	Hair Pin Clip, No. 3
25	GA0898	1	Lid W/Retainers, Clips, Rivets, Rubber Straps and Hardware
	GD1380	-	Front Clip (Included W/GA0898)
	GD2412	-	Rear Retainer (Included W/GA0898)
	G10655	-	Rivet, 3⁄16" x 13⁄32" (Included W/GA0898)
	GD1210	-	Rubber Strap (Included W/GA0898)
	G10171	-	Hex Head Cap Screw, 5⁄16"-18 x 1¼" (Included W/GA0898)
	G11386	-	Flat Washer, 5⁄16" SAE (Included W/GA0898)
	G10232	-	Lock Washer, 5⁄16" (Included W/GA0898)
	G10106	-	Hex Nut, 5⁄16"-18 (Included W/GA0898)
26	G10133	2	Hex Head Cap Screw, 5⁄16"-18 x 1½"
	G11386	2	Flat Washer, 5⁄16" SAE
	G10232	2	Lock Washer, 5⁄16"
	G10106	2	Hex Nut, 5⁄16"-18
A	GA5666	-	Hopper Sub-Assembly (Items 2,6,18,19, 22 and 24)
B	GA5667	-	Hopper Hardware Box (Items 1, 3, 4, 14-17, 21, 23 and 26)

RH101190(PT31/PT32/PT33/PT34/PT35)

4 Row 30"

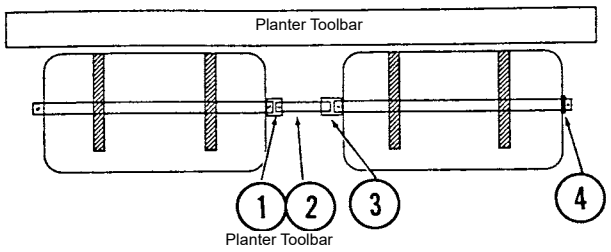

4 Row 36"/38"

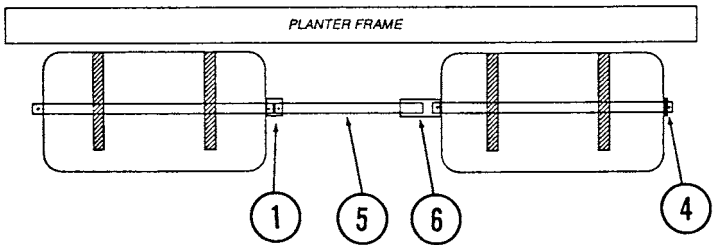

6 Row 30"

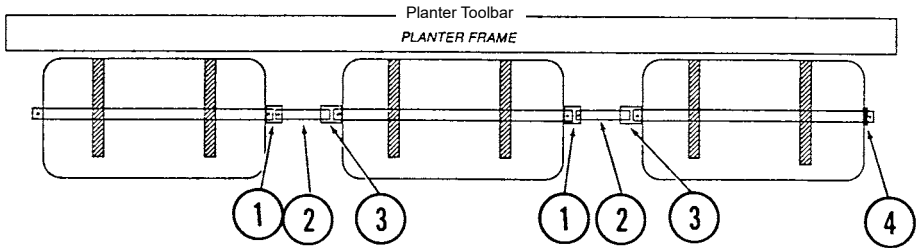

6 Row 36"/38"

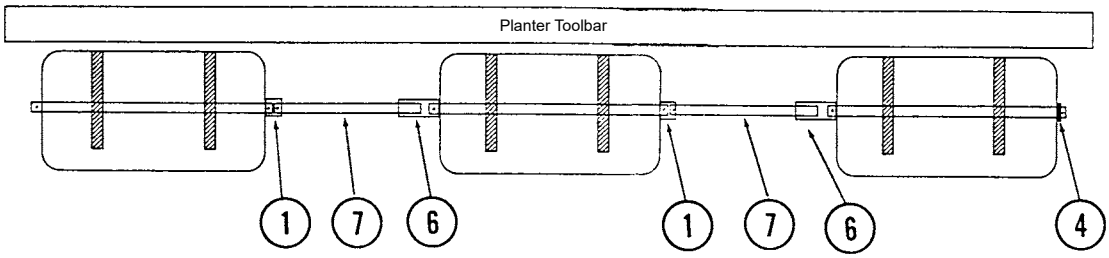

8 Row 30"

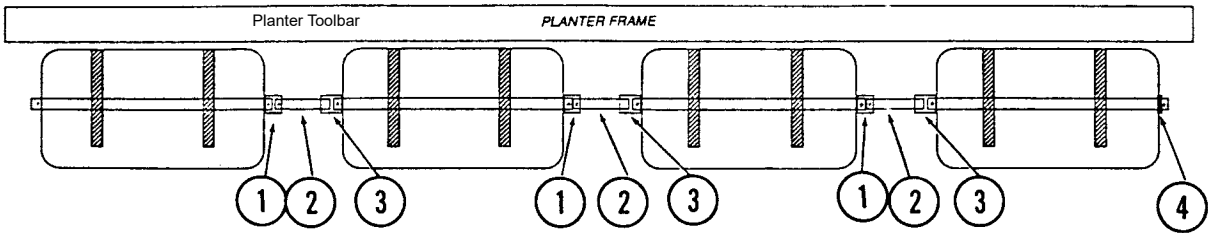

ITEM	PART NO.	QTY.	DESCRIPTION
1	GD5886	-	Coupler, 1¾"
2	GD2548-15.5	-	Hex Shaft, ⅞" x 15½" (1 Hole)
3	GD7867	-	Coupler, 3"
4	G10233	2	Machine Bushing, 1", 10 Gauge
5	GD2548-25.5	-	Hex Shaft, ⅞" x 25½" (1 Hole)
6	GD7868	-	Coupler, 7"
7	GD2548-27.5	-	Hex Shaft, ⅞" x 27½" (1 Hole)

LFC012rev(PT36h/PT51)

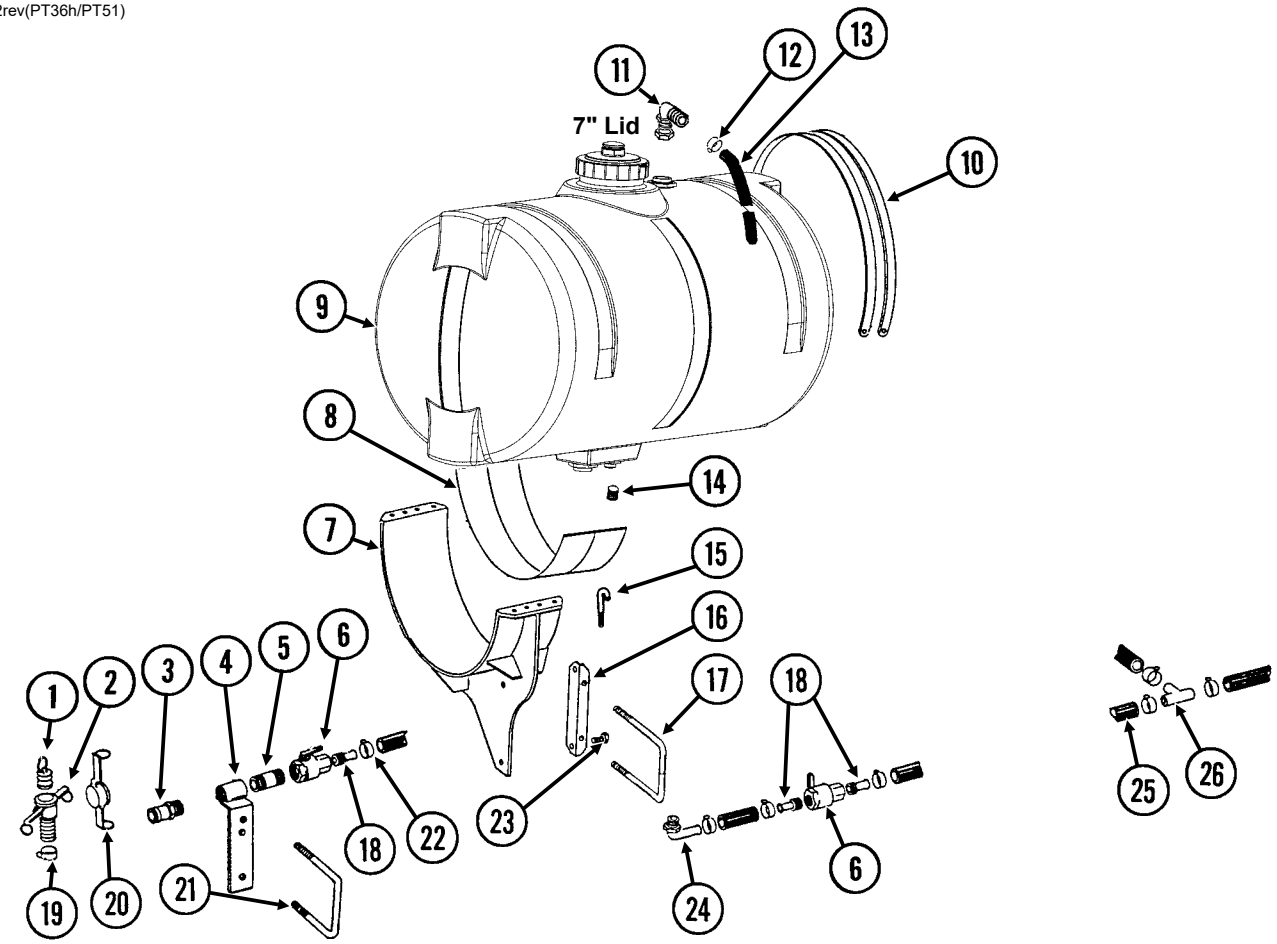

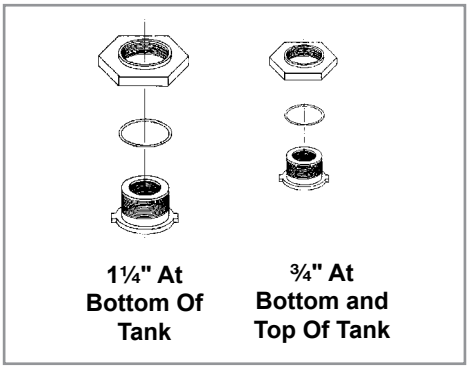

ITEM	PART NO.	QTY.	DESCRIPTION
1	GD1517	1	Dust Plug, 1¼" Male Cam Lock
2	GD1516	1	Adapter, 1¼" Barb To Female Cam Lock
3	GD1514	1	Adapter, 1¼" Male NPT To Cam Lock
4	GA5917	1	Quick Fill Mount
5	G10619	1	Close Nipple, 1¼" NPT
6	GA4976	-	Shutoff Valve, 1¼" NPT
	GR1015	-	Body O-Ring (Included W/GA4976)
	GR1016	-	Stem O-Ring (Included W/GA4976)
	GR1017	-	Teflon Seat (Included W/GA4976)
	GR1018	-	Ball (Included W/GA4976)
	GR1019	-	Handle (Included W/GA4976)
7	GA7375	-	Tank Mount (2 Per Tank)
8	GD1862	-	Pad, 8" x 14' (For Two 30" Tanks)
9	GA14049	-	Tank W/Lid and Fittings, 30" x 150 Gallon, 4 Row
	GA16428	-	Lid W/Vent, 7" (Top Of Tank) (Included W/GA14049)
	GR1708	-	¾" Polypropylene Fitting Assembly (Overflow Fitting, Nut, Bushing, and O-Ring) (Top and Bottom Of Tank) (Included W/GA14049)
	GR0508	-	1¼" Polypropylene Fitting Assembly (Nut, Bushing, and O-Ring) (Bottom Of Tank) (Included W/GA14049)
		-	
	GR1941	-	Seal (Included W/GA14049)
10	GD1520	-	Band, 30"
11	G10917	2	Elbow, 90°, ¾" NPT To Barb
12	G10278	2	Hose Clamp, No. 16
13	G4205-12	1	Hose, ¾" x 144"
14	G10096	-	Pipe Plug, ¾" NPT
15	GD1337	-	J-Bolt, 5⁄16"-18
	G11182	-	Lock Nut W/Nylon Insert, 5⁄16"-18
16	GD10110	-	Mounting Angle (2 Per Tank)
17	GD1748	-	U-Bolt, 7" x 7" x ¾"-10
	G10231	-	Lock Washer, ¾"
	G10105	-	Hex Nut, ¾"-10
18	G10626	-	Adapter, 1¼" NPT To Barb
19	G10672	1	Hose Clamp, No. 28
20	GD1515	1	Dust Cap, 1¼" Cam Lock
21	GD7145	1	U-Bolt, 7" x 7" x ½"-13
	GD11721	1	U-Bolt, 5" x 7" x ½"-13
	G10228	2	Lock Washer, ½"
	G10102	2	Hex Nut, ½"-13
22	G10674	-	Hose Clamp, No. 24
23	G10007	-	Hex Head Cap Screw, 5⁄8"-11 x 1½"
	G10230	-	Lock Washer, 5⁄8"
	G10104	-	Hex Nut, 5⁄8"-11
24	G10629	-	Elbow, 90°, 1¼" NPT To Barb
25	G4200-01	1	Hose, 1¼" x 22', 4 Row
26	G10633	-	Tee, 1¼" Barb

LFC012rev(PT36i/PT51)

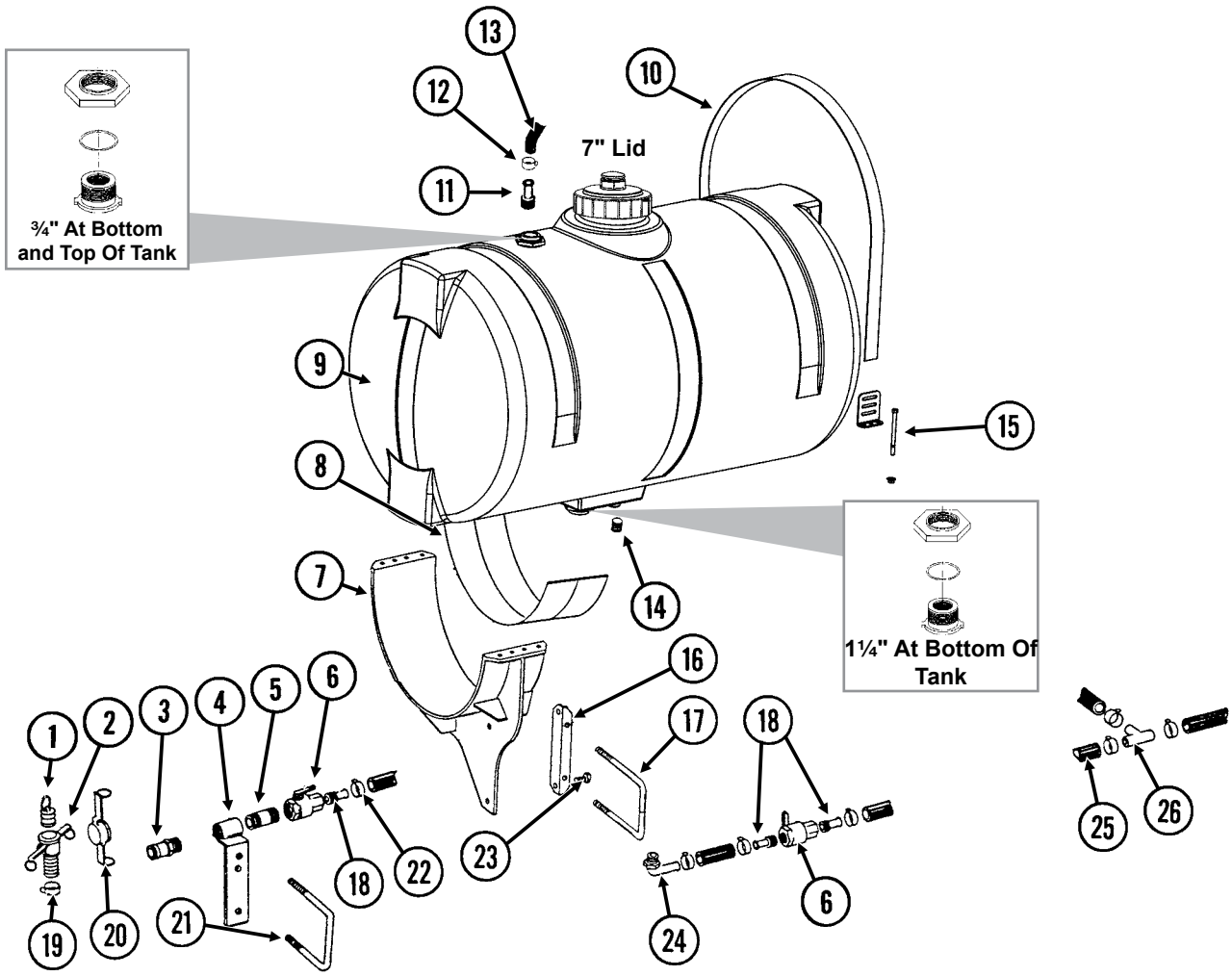

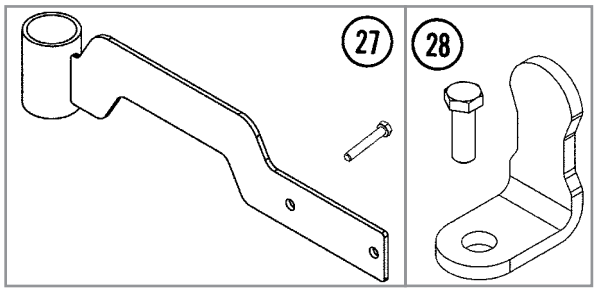

ITEM	PART NO.	QTY.	DESCRIPTION
1	GD1517	1	Dust Plug, 1¼" Male Cam Lock
2	GD1516	1	Adapter, 1¼" Barb To Female Cam Lock
3	GD1514	1	Adapter, 1¼" Male NPT To Cam Lock
4	GA5917	1	Quick Fill Mount
5	G10619	1	Close Nipple, 1¼" NPT
6	GA4976	-	Shutoff Valve, 1¼" NPT
	GR1015	-	Body O-Ring (Included W/GA4976)
	GR1016	-	Stem O-Ring (Included W/GA4976)
	GR1017	-	Teflon Seat (Included W/GA4976)
	GR1018	-	Ball (Included W/GA4976)
	GR1019	-	Handle (Included W/GA4976)
7	GA7375	-	Tank Mount (2 Per Tank)
8	GD1862	-	Pad, 8" x 14' (For Two 30" Tanks)
9	GA14049	-	Tank W/Lid and Fittings, 30" x 150 Gallon, 6 and 8 Row
	GA16428	-	Lid, 7" (Included W/GA14049)
	GR1941	-	Lid Seal (Included W/GA14049)
	GR1708	-	¾" Polypropylene Fitting Assembly (Overflow Fitting, Nut, Bushing, and O-Ring) (Top and Bottom Of Tank) (Included W/GA14049)
	GR0508	-	1¼" Polypropylene Fitting Assembly (Nut, Bushing, and O-Ring) (Bottom Of Tank) (Included W/GA14049)
10	GD11124	-	Strap, 84"
11	G10626	2	Adapter, 1¼" NPT To Barb
12	G10674	2	Hose Clamp, No. 24
13	G4602-01	1	Black Helix Hose, 1¼" x 18'
14	G10096	-	Pipe Plug, ¾" NPT
15	G10485	-	Hex Head Tap Bolt, ⅜"-16 x 5"
	G10901	-	Lock Nut, ⅜"-16
16	GD10110	-	Mounting Angle (2 Per Tank)
17	GD1748	-	U-Bolt, 7" x 7" x ¾"-10
	G10231	-	Lock Washer, ¾"
	G10105	-	Hex Nut, ¾"-10
18	G10626	-	Adapter, 1¼" NPT To Barb
19	G10672	1	Hose Clamp, No. 28
20	GD1515	1	Dust Cap, 1 ¼" Cam Lock
21	GD7145	1	U-Bolt, 7" x 7" x ½"-13
	GD11721	1	U-Bolt, 5" x 7" x ½"-13
	G10228	2	Lock Washer, ½"
	G10102	2	Hex Nut, ½"-13
22	G10674	-	Hose Clamp, No. 24
23	G10007	-	Hex Head Cap Screw, ⅝"-11 x 1½"
	G10230	-	Lock Washer, ⅝"
	G10104	-	Hex Nut, ⅝"-11
24	G10629	-	Elbow, 90°, 1¼" NPT To Barb
25	G4200-02	-	Hose, 1¼" x 27', 6 Row
	G4200-03	-	Hose, 1¼" x 32', 8 Row
26	G10633	-	Tee, 1¼" Barb
27	GA14112	-	Hose Guide
	G10004	-	Hex Head Cap Screw, ⅜"-16 x 1¼"
	G11091	-	Serrated Flange Nut, ⅜"-16
28	GD20060	-	Hose Bracket
	G10004	-	Hex Head Cap Screw, ⅜"-16 x 1¼"
	G11091	-	Serrated Flange Nut, ⅜"-16
29	GD11123	-	Anchor

(FRTZ269)

50 Tooth Drive Sprocket and 18 Tooth Driven Sprocket

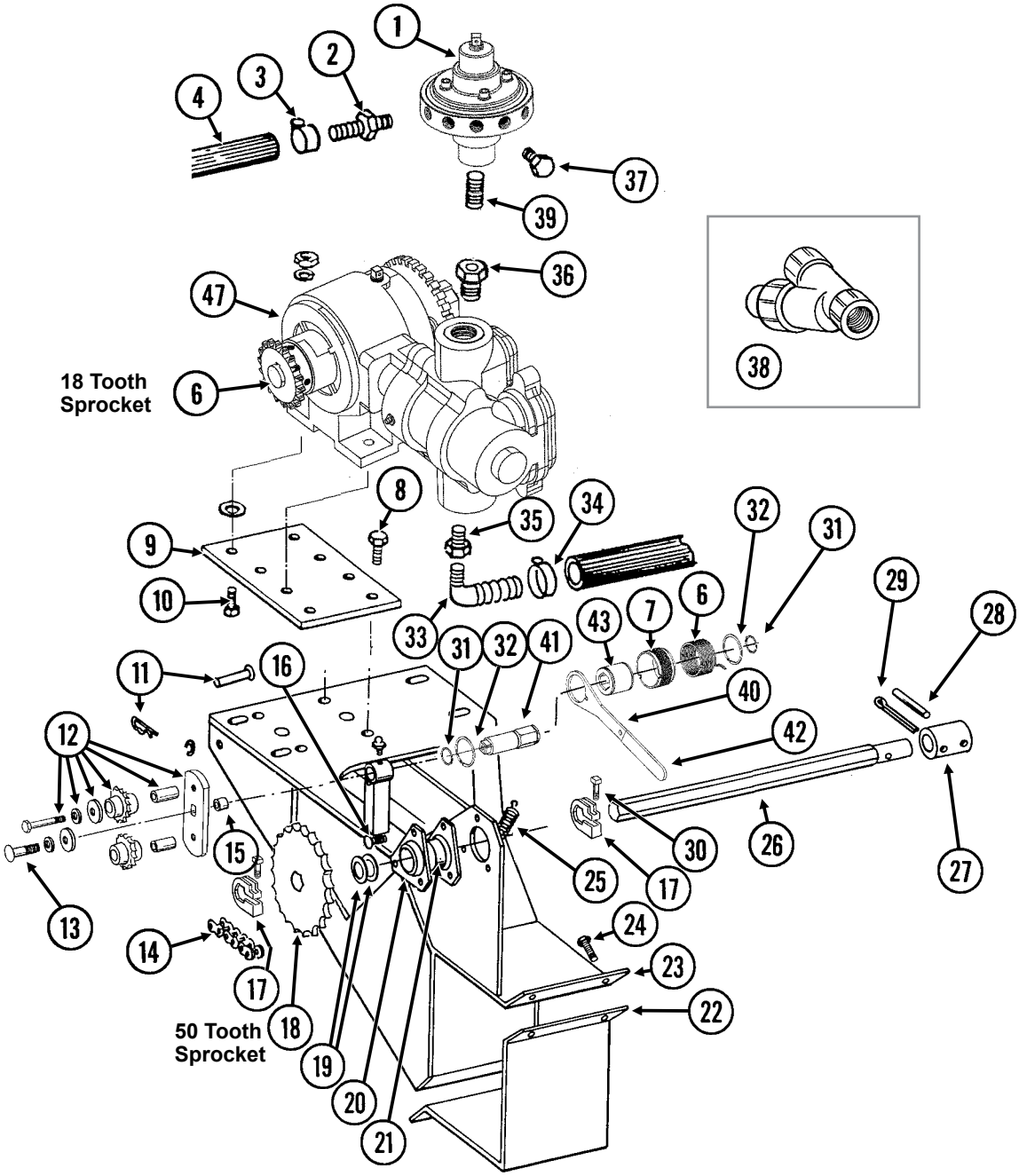

ITEM	PART NO.	QTY.	DESCRIPTION
1	---	-	See “Liquid Fertilizer Piston Pump Flow Divider” on page P108
2	GD11700	-	Adapter, ¼" NPT To ⅜" Barb
3	G10681	-	Hose Clamp, No. 6
4	G4301-01 G4301-03 G4301-04	1 - -	Hose, ⅜" x 30', 4 Row Hose, ⅜" x 60', 6 Row Hose, ⅜" x 100', 8 Row
5	---	-	See “Liquid Fertilizer Piston Pump Uses 18 Tooth Sprocket” on page P106
6	GD14413	1	Torsion Spring, L.H. (Used On R.H. Wrap Spring Wrench)
7	GD19343	1	Release Collar, R.H.
8	G10004 G10229 G10101	4 4 4	Hex Head Cap Screw, ⅜"-16 x 1¼" Lock Washer, ⅜" Hex Nut, ⅜"-16
9	GD11180	1	Plate
10	G10003 G11387 GR1122 G10229 G10101	4 4 4 4 4	Hex Head Cap Screw, ⅜"-16 x 1½" Flat Washer, ⅜" SAE Mounting Pad Lock Washer, ⅜" Hex Nut, ⅜"-16
11	G10478 G10409 G10670	1 1 1	Clevis Pin, 5⁄16" x 1" Retaining Ring, 5⁄16" Hair Pin Clip, No. 3
12	GA7336 GD7426 GD1026 G11387 G10229 G10047	1 - - - - -	Idler W/Bolt-On Sprockets Sprocket, 12 Tooth (Included W/GA7336) Sleeve, 1 3⁄16" Long (Included W/GA7336) Flat Washer, ⅜" SAE (Included W/GA7336) Lock Washer, ⅜" (Included W/GA7336) Hex Head Cap Screw, ⅜"-16 x 1¾" (Included W/GA7336)
13	G11100 G10227 G11453	1 1 1	Hex Socket Button Head Cap Screw, ¼"-20 x ½", Grade 8 Lock Washer, ¼" Fender Washer, ¼"
14	G3310-126 GR0912	1 -	Chain, No. 40, 126 Pitch Including Connector Link Connector Link, No. 40
15	GD2734-08	1	Sleeve, 1¼" O.D. x ⅝" Long
16	G10303 G10232 G10106	3 3 3	Carriage Bolt, 5⁄16"-18 x 1" Lock Washer, 5⁄16" Hex Nut, 5⁄16"-18
17	GD11045 G10130 G10923	2 - -	Lock Clamp Square Head Machine Bolt, 5⁄16"-18 x 1¾" Flange Nut, 5⁄16"-18, No Serration
18	GA5194	1	Sprocket, 50 Tooth
19	G10233	2	Machine Bushing, 1", 10 Gauge
20	G3400-01	2	Flangette
21	G2100-03	1	Bearing, ⅞" Hex Bore, Spherical
22	GD15685	1	Clamp
23	GA6501 G10641 G10640	1 - -	Drive Plate W/Grease Fitting Grease Fitting, ⅛" NPT Grease Fitting, ¼"-28
24	G10017 G10228 G10102	4 4 4	Hex Head Cap Screw, ½"-13 x 1½" Lock Washer, ½" Hex Nut, ½"-13
25	GD5857	1	Spring
26	GD5990	1	Shaft, 74"
27	GD3839	1	Coupler, 2"
28	G10602	1	Spring Pin, ¼" x 1½"

Continued on next page.

ITEM	PART NO.	QTY.	DESCRIPTION
29	G10460	1	Cotter Pin, ¼" x 2"
30	G10130 G10923	- -	Square Head Machine Bolt, 5⁄16"-18 x 1¾" Flange Nut, 5⁄16"-18, No Serration
31	G11075	2	External Inverted Snap Ring, ⅞"
32	G10496	2	External Inverted Snap Ring, 1½"
33	G10629	1	Elbow, 90°, 1¼" NPT To Barb
34	---	-	See “Liquid Fertilizer Tanks, Saddle, Mounts, Hoses, and Fittings, 4 Row” on page P99 See “Liquid Fertilizer Tanks, Saddles, Mounts, Hoses, and Fittings, 6 and 8 Row” on page P101
35	G10615	1	Reducing Bushing, 1½" Male NPT To 1¼" Female
36	G11237	1	Reducing Bushing, 1½" Male NPT To ¾" Female
37	G10292	-	Pipe Plug, ¼" NPT
38	GA3893 GR0880 GR0881 GR0882 GR0883	1 - - - -	Strainer Complete Screen, No. 40 Mesh (Included W/GA3893) Gasket (Included W/GA3893) Y-Body (Included W/GA3893) End Cap (Included W/GA3893)
39	G10994	1	Close Nipple, ¾" NPT, Stainless Steel
40	GD14431	1	Handle
41	GD14427	1	Tightener Shaft, 4⅞"
42	G11078	1	Vinyl Cap
43	GD14432	1	Sleeve, 1¼"
A	G1K269	-	Hex Lock Clamp Assembly (Items 17 and 30)
B	G1K378	-	Wrap Spring Wrench Replacement Kit, Blue Collar, R.H., (Items 6-7, 13, 15, 31, 32, 36 and 41-43)

(A12335a/GR1808)

Model NGP-6055

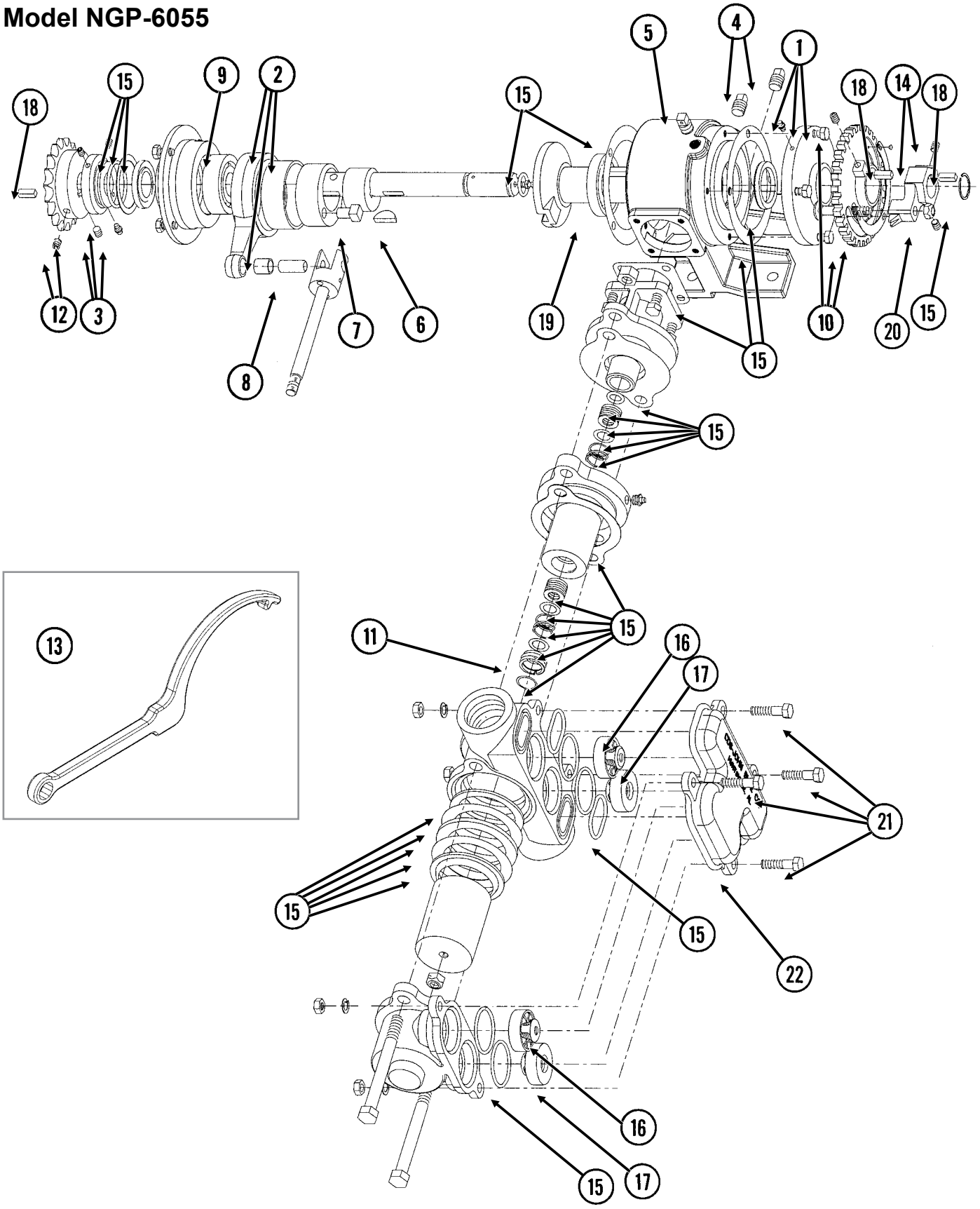

ITEM	PART NO.	QTY.	DESCRIPTION
1	GR1804	1	Flange Cover Assembly
	G10991	4	Hex Head Cap Screw, 5⁄16"-18 x 7⁄8"
2	GR1802	1	Connecting Rod Assembly
3	GR1801	1	Spacer Assembly
	G10693	3	Hex Socket Head Set Screw, 5⁄16"-18 x 3⁄8"
4	GR1123	2	Plug
5	GR1543	1	Vent Plug
6	GR1112	1	Woodruff Key
7	GR1120	1	Eccentric Pin
8	GR1124	1	Pin
9	GR1104	1	Bearing
10	GR1805	1	Setting Hub Assembly
11	GR1134	1	Stuffing Box Insert
12	GR1389	1	Sprocket, 18 Tooth
13	GR1808	1	Adjustment Wrench
14	GR1806	1	Setting Pointer Assembly
15	GR1795	1	Repair Kit, Includes: (6) Gaskets, (9) O-Rings, (4) Washers, (1) Retaining Ring, (2) Oil Seals, (1) Snap Ring, (1) Thrust Washer, (1) Rod Bushing, (2) Flange Plunger Packings, (2) Packing Springs, (2) Rod Vee Packing Sets
16	GR1799	2	Discharge Valve Assembly
17	GR1797	2	Suction Valve Assembly
18	GR1118	3	Setting Arm Key
19	GR1116	1	Bearing
20	G10306	1	Carriage Bolt, 3⁄8"-16 x 2"
	G10108	1	Lock Nut, 3⁄8"-16
21	G10003	4	Hex Head Cap Screw, 3⁄8"-16 x 1½"
	G11387	4	Flat Washer, 3⁄8" SAE
	G10229	4	Lock Washer, 3⁄8"
	G10101	4	Hex Nut, 3⁄8"-16
22	GR2003	1	Valve Cover
A	GA12330	-	Piston Pump Complete W/18 Tooth Sprocket (Model NGP-6055)

(FRTZ159/PT40a/FRTZ202c)

Model FD-1200 Flow Divider, 12 Outlet

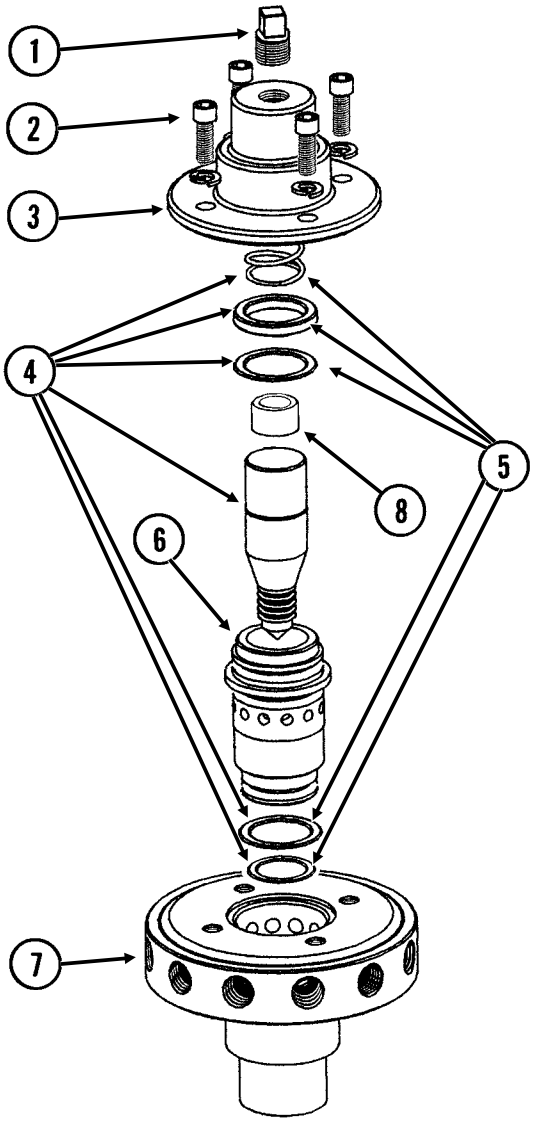

¾" NPT

ITEM	PART NO.	QTY.	DESCRIPTION
1	GR1543	1	Vent Plug
2	GR1542	4	Hex Socket Head Screw, ¼"-20 x ¾"
	GR1541	4	Lock Washer, ¼", Stainless Steel
3	GR1540	1	Cap
4	GR1544	1	Needle Assembly W/Seal Kit (Item 22)
5	GR1545	1	Seal Kit, Includes: (3) O-Rings, (1) Seal, (1) Spring
6	GR1535	1	Sleeve
7	GR1533	1	Body (12 Outlet)
8	GR1574	1	Sleeve, 1" O.D. x ½" Long, Stainless Steel
A	GA8931	1	Liquid Fertilizer Piston Pump Flow Divider Complete, 12 Outlet (Model FD-1200)

(IP1624)

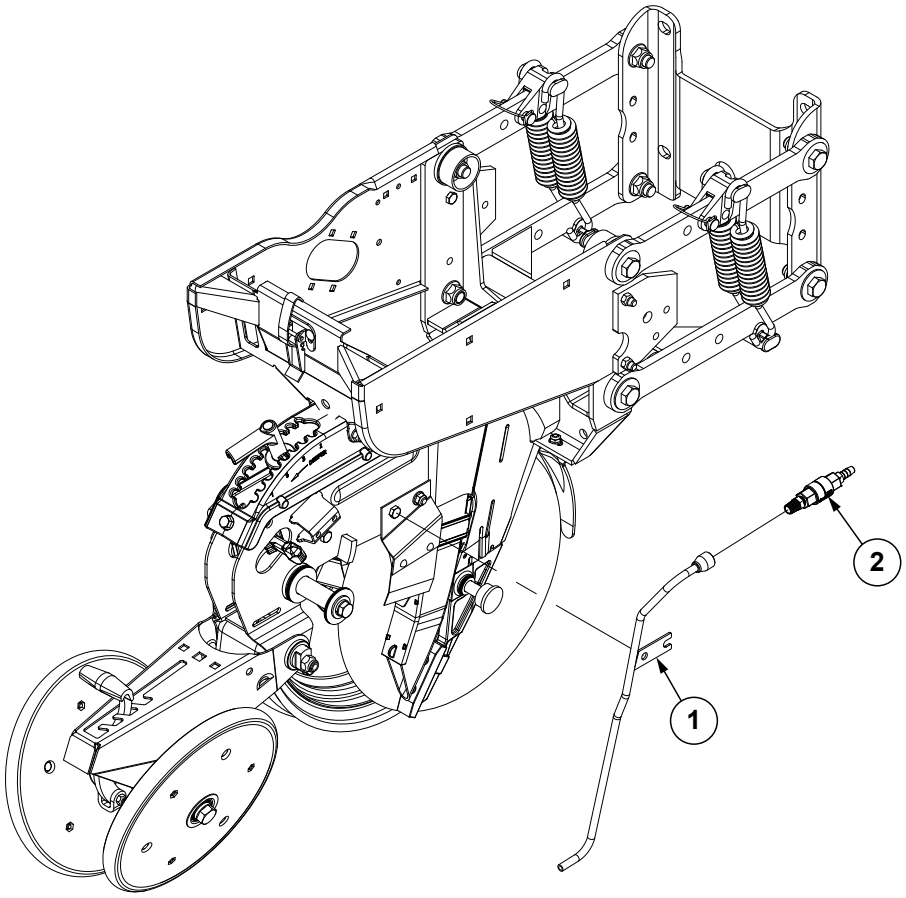

ITEM	PART NO.	QTY.	DESCRIPTION
1	GA18822	-	Liquid Fertilizer Tube
2	GA20583	-	Check Valve Assembly

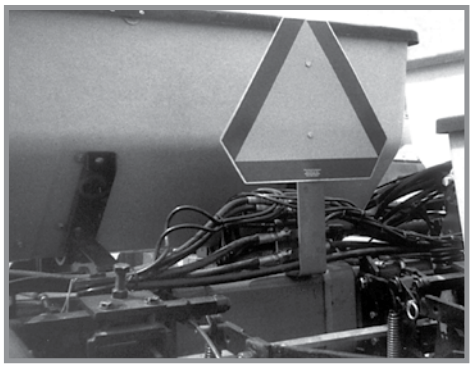

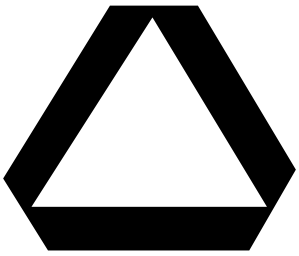

Part No.: GD2199
Description: SMV Sign
Quantity: 1



Conventional Row Marker



Low Profile Row Marker



Part No.: G7100-397
Description: Decal, Warning
Quantity: 1 (Per Row Marker Cylinder - Conventional)
4 (2 Per Row Marker)

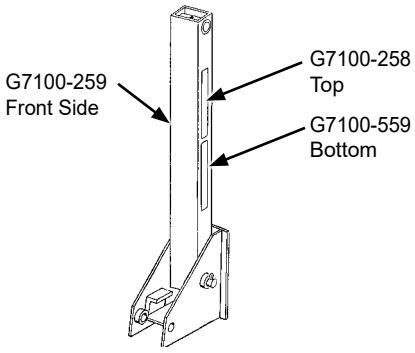



Part No.: G7100-557
Description: Reflective Decal, Red, 2" x 9", Rectangular
Quantity: 2 (1 Per Row Marker) (If Applicable)

Part No.: G7100-558
Description: Reflective Decal, Amber, 2" x 9", Rectangular
Quantity: 2 (1 Per Row Marker)

Part No.: G7100-559
Description: Reflective Decal, Orange, 2" x 9", Rectangular
Quantity: 2 (2 Per Row Marker)

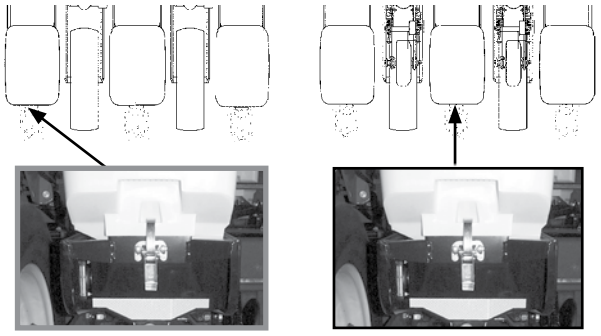

G7100-261 G7100-263

G7100-258 G7100-260

NOTE: Exceptions to above are 8 Row 30" planters. Red reflective decals are used on 1, 3, 6, and 8 row units. Orange reflective decals are used on 2, 4, 5, and 7 row units. (If Applicable)

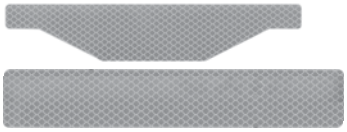

Part No.: G7100-261
Description: Reflective Decal, Red, 1¾" x 9", Die-Cut
Quantity: 2 (One per row unit located on the hopper support on the outside row unit on each end of the planter) (if applicable)

Part No.: G7100-263
Description: Reflective Decal, Orange, 1¾" x 9", Die-Cut
Quantity: 2 (One per row unit located on the hopper support on the second row unit in on each end of the planter) (if applicable)

Part No.: G7100-557
Description: Reflective Decal, Red, 2" x 9", Rectangular
Quantity: 2 (One per row unit located on the granular chemical hopper panel extension on the outside row unit on each end of the planter) (If applicable)

Part No.: G7100-559
Description: Reflective Decal, Orange, 2" x 9", Rectangular
Quantity: 2 (One per row unit located on the granular chemical hopper panel extension on the second row unit in on each end of the planter) (if applicable)





Part No.: G7100-393
Description: Decal, Warning
Quantity: 1

G7100-385

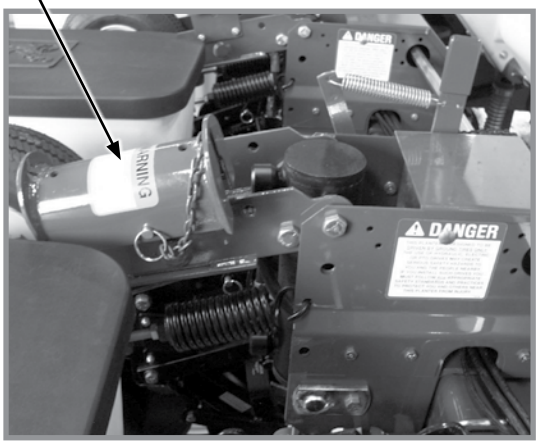



Part No.: G7100-385
Description: Decal, Warning
Quantity: 1 (Per Contact Wheel Assembly)

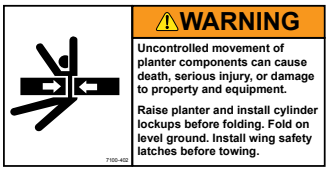

Part No.: G7100-402
Description: Decal, Warning
Quantity: 1 (Per Contact Wheel Assembly)



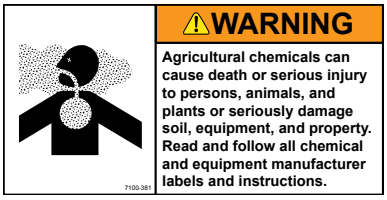

Part No.: G7100-381
Description: Decal, Warning
Quantity: 1 (1 Per Row Unit - Located On Underside Of Granular Chemical Hopper Lid)



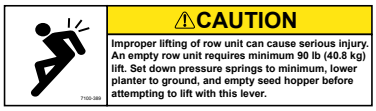

Part No.: G7100-389
Description: Decal, Caution
Quantity: 1 (Located On Interplant Push Row Unit Lift Lever)

G7100-255
or
G7100-385



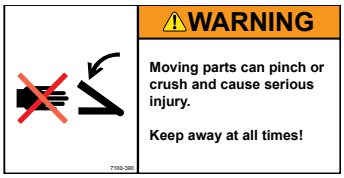

Part No.: G7100-390
Description: Decal, Warning
Quantity: 2 (Located On Interplant Self-Leveling Hitch Extension)



Part No.: G7100-385
Description: Decal, Warning
Quantity: 1 (Located On Interplant Lift Cylinder Lockup)



Part No.: GD2984
Description: Tie Strap, 34"

Part No.: GD1512
Description: Tie Strap, 7½"

Part No.: GD2117
Description: Tie Strap, 14½"

Part No.: GD2984
Description: Tie Strap, 34"



Part No.: G7100-295
Description: Decal, Spring Tension Release
Quantity: -



Part No.: G7100-60
Description: Decal, Double Frame
Quantity: 1

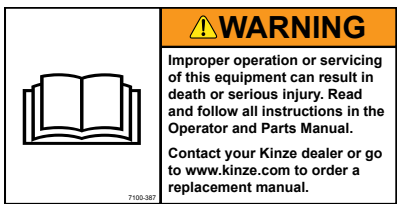

Part No.: G7100-387
Description: Decal, Warning
Quantity: 1

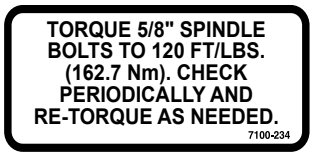	Part No.: G7100-234 Description: Decal, Bolt Torque Quantity: -
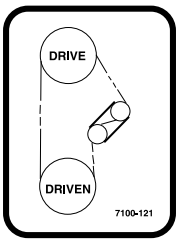	Part No.: G7100-121 Description: Decal, Transmission Quantity: 1
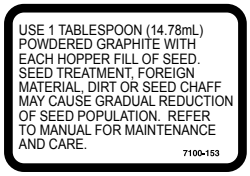	Part No.: G7100-153 Description: Decal, Information Quantity: 1 Per Brush-Type Seed Meter
	Part No.: G7100-111 Description: Decal, Oil Daily Quantity: -
	Part No.: G7100-116 Description: Decal, Grease Daily Quantity: -
	Part No.: GR2127MPP Description: Blue Paint, Twelve Aerosol Cans
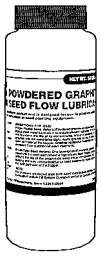	Part No.: GR0146MPP Description: Powdered Graphite, Twenty-Four 1 Pound Containers Part No.: GR2335 Description: Powdered Graphite, 40 Pound Container

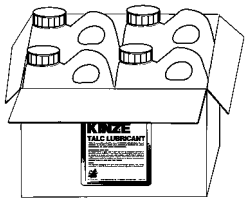	Part No.: GR1570MPP Description: Talc Lubricant, Four 8 Pound Containers Part No.: GR2334 Description: Talc Lubricant, 40 Pound Container
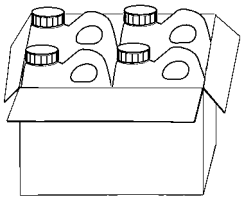	Part No.: GR1842MPP Description: Graphite Lubricant, Four 5 Pound Containers
	Part No.: GR2240MPP Description: Talc/Graphite Blend (80 Talc/20 Graphite), 8 Pound Container
	Part No.: GR2241MPP Description: Dispensing Cap, 10/Package
	Part No.: G10074401 Description: Decal, Kinze 3005 Quantity: 2 (1 On Each Side of Hitch)
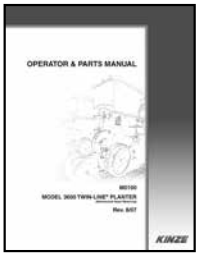	Part No.: GM0298-01 Description: Operator Manual, Model 3005 Part No.: GM0298-02 Description: Parts Manual, Model 3005 Part No.: GPR1094 Description: Binder (Contact Kinze Parts To Order)

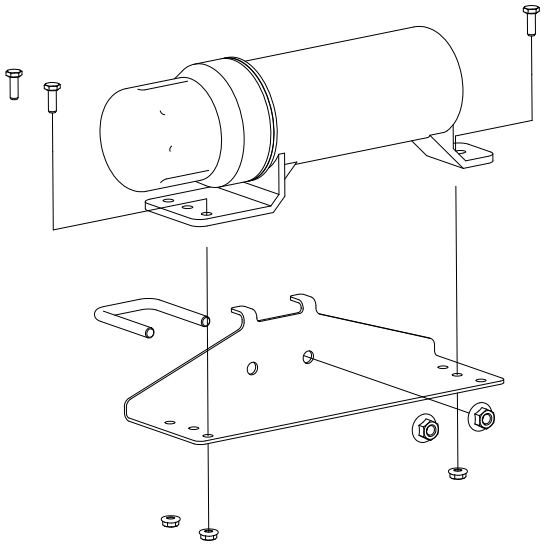

	Part No.: GA15422 Description: Operator's Manual Canister Quantity: 1
	Part No.: GD22685 Description: Manual Canister Bracket Quantity: 1
	Part No.: GD22692 Description: U-Bolt, 1¾" x 1¾" x ⅜"-16 Quantity: 1
	Part No.: G11091 Description: Serrated Flange Nut, ⅜"-16 Quantity: 2
	Part No.: G11166 Description: Hex Socket Flange Cap Screw, ¼"-20 x ¾" Quantity: 3
	Part No.: G10621 Description: Serrated Flange Nut, ¼"-20 Quantity: 3
	Part No.: G7100-484 Description: Decal, American Flag

This page left blank intentionally.

Part No.	Page
*A1000	P75
*A1000	P77
*A1018	P73
*A1018	P75
*A1018	P77
*A1019	P75
*A1020	P73
*A1020	P73
*A1021	P77
*A1039	P77
*A1054	P77
*A1055	P77
*A1076	P73
*A1076	P73
*A1076	P75
*A1076	P75
*A1076	P77
*A1076	P77
*A1079	P77
*A1086	P75
*A1090	P77
*A1102	P73
*A1105	P75
*A1138	P73
*A1138	P75
*A1153	P73
*A1168	P75
*A1170	P73
*A1177	P73
*A1177	P75
*A1179	P73
*A1179	P75
*A1182	P73
*A1182	P73
*A1182	P75
*A24473	P65
*A26167	P64
*A26168	P63
*A26936-100	P73
*A26936-100	P75
*A26936-100	P77
*A26947-100	P77
*A3113	P73
*A3114	P77
*A3115	P75
*A3119	P75
*A3142	P73
*A3142	P75
*A3142	P75
*A3142	P77
*A3142	P77
*A3147	P73
*A3147	P75
*A3147	P77
*A3150	P75
*A3150	P77
*A3175	P75
*A3208	P75
*A3209	P77
*A3211	P73
*A7692-100	P73
*A7692-100	P75
*D12038	P64
*D12056	P63
*D12210	P63
*D12210	P64
*D12210	P65
*D12212	P65
*D12213	P65
*D12227	P64
*D12228	P64
*D12231	P63
*D12232	P63
*D12233	P66
*D12233	P67
*D12235	P66
*D12235	P67
*D12236	P66
*D12236	P67
*D12251	P63
*D12251	P64
*D12251	P65
*D12256	P66
*D12256	P67
*D12277	P66
*D12277	P67
*D29649	P63
*D29649	P64
*D29692	P66
*D29692	P67
*D30399	P65
*G6400-06	P71
700-01082	P18
700-01339	P20
900-01117	P18
A26287	P22
A4295	P63
A7370	P48
A7538	P64
A8011	P42
A8013	P42
A8015	P42
A8016	P42
A8018	P42
A8020	P42
A8775	P66
A8827	P65
A8923	P68
A9442	P67
G10001	P12
G10001	P37
G10001	P39
G10001	P39
G10001	P39
G10001	P71
G10001	P71
G10001	P71
G10001	P82
G10001	P85
G10002	P8
G10002	P23
G10002	P88
G10003	P4
G10003	P104
G10003	P107
G10004	P6
G10004	P28
G10004	P32
G10004	P48
G10004	P48
G10004	P53
G10004	P86
G10004	P102
G10004	P102
G10004	P104
G10005	P6
G10005	P8
G10005	P42
G10005	P48
G10006	P46
G10007	P44
G10007	P85
G10007	P100
G10007	P102
G10008	P56
G10010	P10
G10010	P28
G10010	P91
G10011	P88
G10011101	P6
G10011201	P6
G10011301	P32
G10011401	P32
G10013	P12
G10014	P10
G10016	P86
G10016	P94
G10017	P42
G10017	P53
G10017	P88
G10017	P104
G10018	P61
G10018801	P8
G10019	P10
G10020	P18
G10021	P18
G10022	P18
G10023	P23
G10023	P80
G10026	P46
G10028601	P10
G10028701	P10
G10028801	P10
G10031	P10
G10033	P52
G10033	P94
G10035	P92
G10036	P25
G10037	P52
G10037	P96
G10037301	P8
G10038	P53
G10038601	P4
G10038601	P34
G10039	P80
G10039	P86
G10045	P60
G10046	P88
G10047	P44
G10047	P53
G10047	P88
G10047	P94
G10047	P104
G10048	P42
G10048	P42
G10048	P42
G10049	P86
G10053	P46
G10053	P52
G10053	P52
G10053	P94
G10055	P48
G10061	P4
G10061	P14
G10061	P42
G10064	P12
G10064	P47
G10064	P48

Part No.	Page
G10064	P80
G10071	P46
G10074401	P116
G10090401	P8
G10096	P100
G10096	P102
G10100	P86
G10101	P12
G10101	P35
G10101	P37
G10101	P39
G10101	P68
G10101	P71
G10101	P82
G10101	P86
G10101	P104
G10101	P104
G10101	P107
G10102	P37
G10102	P37
G10102	P37
G10102	P37
G10102	P41
G10102	P52
G10102	P52
G10102	P52
G10102	P56
G10102	P58
G10102	P60
G10102	P60
G10102	P80
G10102	P80
G10102	P88
G10102	P92
G10102	P92
G10102	P94
G10102	P96
G10102	P100
G10102	P102
G10102	P104
G10103	P48
G10104	P6
G10104	P6
G10104	P32
G10104	P42
G10104	P42
G10104	P46
G10104	P52
G10104	P86
G10104	P88
G10104	P88
G10104	P88

Part No.	Page
G10104	P92
G10104	P96
G10104	P100
G10104	P102
G10105	P85
G10105	P100
G10105	P102
G10106	P52
G10106	P96
G10106	P96
G10106	P96
G10106	P96
G10106	P96
G10106	P104
G10107	P12
G10107	P25
G10107	P42
G10107	P44
G10107	P48
G10107	P48
G10107	P89
G10108	P4
G10108	P14
G10108	P15
G10108	P22
G10108	P32
G10108	P35
G10108	P39
G10108	P42
G10108	P42
G10108	P42
G10108	P42
G10108	P44
G10108	P48
G10108	P61
G10108	P83
G10108	P85
G10108	P86
G10108	P88
G10108	P88
G10108	P107
G10109	P10
G10109	P12
G10109	P28
G10109	P56
G10109	P58
G10110	P22
G10110	P60
G10110	P80
G10110	P80
G10111	P12
G10111	P25

Part No.	Page
G10111	P39
G10111	P39
G10111	P42
G10111	P46
G10111	P52
G10111	P53
G10111	P53
G10111	P86
G10111	P86
G10111	P86
G10111	P88
G10111	P89
G10111	P94
G10112	P42
G10122301	P4
G10122301	P34
G10128	P52
G10128	P52
G10128	P53
G10130	P37
G10130	P49
G10130	P50
G10130	P104
G10130	P105
G10131	P49
G10131	P50
G10133	P12
G10133	P28
G10133	P56
G10133	P58
G10133	P96
G10157	P41
G10159	P46
G10168	P37
G10168	P60
G10168	P60
G10169	P41
G10171	P96
G10171	P96
G10177	P52
G10177	P96
G10187	P56
G10201	P15
G10201	P22
G10201	P35
G10201	P96
G10201	P96
G10204	P8
G10204	P91
G10207	P4
G10207	P34
G10210	P44

Part No.	Page
G10215	P73
G10215	P75
G10215	P77
G10216	P10
G10217	P89
G10220	P85
G10227	P48
G10227	P52
G10227	P104
G10228	P10
G10228	P37
G10228	P37
G10228	P37
G10228	P37
G10228	P41
G10228	P52
G10228	P52
G10228	P52
G10228	P56
G10228	P58
G10228	P60
G10228	P60
G10228	P60
G10228	P80
G10228	P80
G10228	P92
G10228	P92
G10228	P94
G10228	P96
G10228	P100
G10228	P102
G10228	P104
G10229	P12
G10229	P23
G10229	P28
G10229	P37
G10229	P39
G10229	P39
G10229	P48
G10229	P53
G10229	P53
G10229	P71
G10229	P71
G10229	P71
G10229	P82
G10229	P86
G10229	P86
G10229	P94
G10229	P104
G10229	P104
G10229	P104
G10229	P107

Part No.	Page
G10229401	P83
G10230	P6
G10230	P6
G10230	P10
G10230	P12
G10230	P32
G10230	P42
G10230	P42
G10230	P46
G10230	P52
G10230	P56
G10230	P86
G10230	P86
G10230	P88
G10230	P88
G10230	P88
G10230	P92
G10230	P96
G10230	P100
G10230	P102
G10231	P46
G10231	P100
G10231	P102
G10232	P52
G10232	P88
G10232	P96
G10232	P96
G10232	P96
G10232	P96
G10232	P96
G10232	P104
G10233	P37
G10233	P48
G10233	P49
G10233	P49
G10233	P50
G10233	P50
G10233	P52
G10233	P91
G10233	P94
G10233	P98
G10233	P104
G10235	P48
G10237	P86
G10278	P100
G10284	P32
G10292	P105
G10303	P47
G10303	P48
G10303	P52
G10303	P96
G10303	P96

Part No.	Page
G10303	P104
G10306	P48
G10306	P88
G10306	P107
G10307	P35
G10308	P12
G10309	P14
G10309	P32
G10310	P22
G10312	P4
G10312	P22
G10315	P22
G10322	P86
G10322501	P10
G10323	P18
G10325	P8
G10325	P22
G10325	P39
G10326	P15
G10329801	P14
G10334701	P10
G10334801	P10
G10334901	P10
G10335001	P10
G10335101	P10
G10335201	P10
G10338	P14
G10348	P41
G10370	P48
G10397801	P10
G10401	P18
G10408	P94
G10409	P94
G10409	P104
G10419	P94
G10428	P39
G10430	P50
G10438	P4
G10445	P94
G10450	P89
G10451	P32
G10451	P39
G10451	P96
G10453	P50
G10455	P52
G10455	P94
G10459	P86
G10460	P39
G10460	P46
G10460	P49
G10460	P50
G10460	P53

Part No.	Page
G10460	P56
G10460	P58
G10460	P58
G10460	P58
G10460	P58
G10460	P94
G10460	P96
G10460	P105
G10463	P32
G10470	P18
G10475	P20
G10478	P104
G10485	P102
G10496	P37
G10496	P52
G10496	P105
G10500	P18
G10501	P48
G10502X	P1
G10503	P28
G10504X	P29
G10507	P86
G10527	P53
G10535	P37
G10544	P60
G10546	P14
G10546	P24
G10551	P4
G10551	P34
G10561	P96
G10567	P14
G10567	P24
G10570	P24
G10574	P39
G10581	P37
G10581	P39
G10585	P94
G10587	P96
G10588	P96
G10592	P86
G10594	P86
G10599	P12
G10599	P35
G10599	P86
G10602	P14
G10602	P18
G10602	P24
G10602	P48
G10602	P49
G10602	P50
G10602	P53
G10602	P94

Part No.	Page
G10602	P104
G10603	P18
G10604	P18
G10615	P105
G10619	P100
G10619	P102
G10620	P4
G10620	P14
G10620	P22
G10620	P47
G10620	P48
G10620	P91
G10621	P14
G10621	P18
G10621	P18
G10621	P22
G10621	P23
G10621	P32
G10621	P47
G10621	P117
G10622	P8
G10622	P48
G10626	P100
G10626	P102
G10626	P102
G10629	P100
G10629	P102
G10629	P105
G10633	P100
G10633	P102
G10636	P25
G10636	P46
G10640	P39
G10640	P52
G10640	P56
G10640	P56
G10640	P58
G10640	P58
G10640	P86
G10640	P88
G10640	P94
G10640	P96
G10640	P104
G10641	P85
G10641	P104
G10645	P39
G10647	P42
G10655	P96
G10660	P24
G10670	P22
G10670	P23
G10670	P56

Part No.	Page
G10670	P96
G10670	P104
G10671	P44
G10672	P96
G10672	P100
G10672	P102
G10674	P100
G10674	P102
G10674	P102
G10676	P96
G10681	P104
G10686	P61
G10690	P18
G10693	P107
G10718	P32
G10722	P60
G10725	P60
G10727	P61
G10732	P6
G10732	P32
G10751	P6
G10751	P32
G10752	P6
G10752	P14
G10757	P22
G10758	P22
G10765	P28
G10821	P52
G10821	P94
G10844	P60
G10860	P47
G10860	P53
G10862	P86
G10864	P22
G10870	P47
G10870	P53
G10871	P88
G10874	P48
G10879	P58
G10895	P42
G10901	P102
G10903	P42
G10909	P37
G10912	P4
G10912	P34
G10917	P100
G10923	P37
G10923	P49
G10923	P50
G10923	P104
G10923	P105
G10939	P68
G10940	P10
G10957	P68
G10961	P91
G10966	P22
G10968	P37
G10974	P28
G10991	P88
G10991	P107
G10993	P42
G10994	P105
G11009	P18
G11015	P4
G11015	P34
G11073	P24
G11075	P53
G11075	P105
G11078	P52
G11078	P105
G11081	P46
G11085	P42
G11091	P6
G11091	P102
G11091	P102
G11091	P117
G11100	P52
G11100	P104
G11166	P117
G11182	P100
G11202	P83
G11209	P22
G11228	P28
G11232	P48
G11236	P28
G11237	P105
G11314	P46
G11385	P22
G11385	P24
G11385	P48
G11385	P80
G11386	P10
G11386	P10
G11386	P10
G11386	P10
G11386	P47
G11386	P61
G11386	P88
G11386	P96
G11386	P96
G11386	P96
G11387	P4
G11387	P12
G11387	P12
G11387	P14
G11387	P15
G11387	P22
G11387	P35
G11387	P39
G11387	P42
G11387	P48
G11387	P53
G11387	P53
G11387	P71
G11387	P71
G11387	P83
G11387	P86
G11387	P86
G11387	P88
G11387	P94
G11387	P104
G11387	P104
G11387	P107
G11389	P28
G11389	P32
G11389	P39
G11389	P39
G11389	P41
G11389	P42
G11389	P86
G11389	P88
G11389	P88
G11389	P94
G11389	P96
G11391	P12
G11391	P44
G11391	P46
G11391	P48
G11391	P60
G11391	P85
G11391	P86
G11391	P89
G11391	P91
G11392	P28
G11394	P39
G11396	P39
G11396	P58
G11400	P46
G11418	P60
G11419	P12
G11448	P20
G11453	P52
G11453	P104
G11514	P6
G11514	P32
G11514	P32
G11591	P4
G11591	P34
G11592	P4
G11592	P34
G11742	P61
G11793	P24
G11862	P12
G11874	P44
G11960	P83
G11961	P83
G11976	P6
G11976	P32
G1K248	P80
G1K248	P83
G1K252	P80
G1K252	P83
G1K253	P48
G1K268	P82
G1K269	P105
G1K296	P10
G1K320	P80
G1K320	P82
G1K321	P80
G1K321	P82
G1K322	P82
G1K323	P82
G1K331	P37
G1K345	P12
G1K362	P83
G1K363	P83
G1K378	P53
G1K378	P105
G1K534	P32
G1K535	P32
G1K758	P6
G1K759	P32
G2100-03	P48
G2100-03	P53
G2100-03	P53
G2100-03	P104
G2403-06	P73
G2403-08	P73
G2403-08	P73
G2403-08	P75
G2403-08	P77
G2603-08	P75
G2603-08	P77
G2603-08-08-06	P73
G2603-08-08-06	P75
G2701-08	P73
G2703-08	P75
G2703-08	P77

Part No.	Page
G306-08	P73
G306-08	P75
G306-08	P77
G3303-114	P22
G3303-16	P6
G3303-96	P32
G3303-98	P6
G3310-100	P52
G3310-126	P104
G3310-132	P48
G3310-138	P37
G3310-252	P37
G3310-80	P53
G3310-92	P52
G3310-98	P94
G3324-01	P44
G3400-01	P48
G3400-01	P53
G3400-01	P104
G4100-02	P41
G4200-01	P100
G4200-02	P102
G4200-03	P102
G4205-12	P100
G4301-01	P104
G4301-03	P104
G4301-04	P104
G4602-01	P102
G6325X	P6
G6400-08	P73
G6400-08	P75
G6400-08	P77
G6400-08	P77
G6400-08-04	P77
G6400-08-06	P77
G6408-08	P63
G6408-08	P64
G6408-08	P65
G6408-08	P66
G6408-08	P67
G6500-06	P73
G6500-06	P75
G6500-08	P77
G6500-08-06	P77
G6502-06	P73
G6502-06	P75
G6502-08	P77
G6602-08	P75
G6602-08	P77
G6795X	P92
G6801-06-08	P73
G6801-06-08	P75
G6801-08	P73
G6801-08	P75
G6801-08	P77
G7100-111	P115
G7100-116	P115
G7100-121	P115
G7100-153	P115
G7100-234	P115
G7100-261	P112
G7100-263	P112
G7100-295	P114
G7100-381	P113
G7100-385	P113
G7100-385	P114
G7100-387	P114
G7100-389	P113
G7100-390	P114
G7100-393	P112
G7100-397	P111
G7100-402	P113
G7100-484	P117
G7100-501	P61
G7100-557	P111
G7100-557	P112
G7100-558	P111
G7100-559	P111
G7100-559	P112
G7100-559	P111
G7100-60	P114
G8647x	P82
G9881X	P91
G9948X	P44
GA0237	P85
GA0245	P60
GA0257	P60
GA0378	P50
GA0863	P96
GA0864	P96
GA0898	P96
GA10036	P91
GA10037	P91
GA10047	P88
GA10048	P88
GA10137	P14
GA10151	P14
GA10157	P4
GA11331	P37
GA11331	P50
GA11591	P58
GA11766	P58
GA11767	P58
GA11971	P32
GA12108	P88
GA12109	P88
GA12235	P28
GA12236	P28
GA12330	P107
GA12403	P82
GA13521	P83
GA13522	P83
GA13790	P47
GA14049	P100
GA14049	P102
GA14112	P102
GA14348	P46
GA14349	P46
GA14412	P46
GA14413	P46
GA15151	P60
GA15197	P12
GA15416	P86
GA15416	P88
GA15422	P117
GA16082	P82
GA16428	P100
GA16428	P102
GA1720	P6
GA17547	P82
GA18201	P18
GA18311	P91
GA18822	P110
GA2007	P14
GA2007	P32
GA2012L	P8
GA2012R	P8
GA2014	P28
GA2019	P18
GA2020	P18
GA20583	P110
GA2068	P48
GA20902	P82
GA21104	P64
GA21105	P64
GA21106	P63
GA21106	P64
GA21111	P63
GA21112	P63
GA21158	P67
GA21159	P67
GA21167	P66
GA21168	P66
GA21184	P65
GA21185	P65
GA21515	P4
GA21515	P82
GA21676	P10
GA21677	P10
GA21798	P94
GA2180	P37
GA24239	P25
GA24449	P61
GA24825	P46
GA24826	P46
GA24828	P46
GA24889	P32
GA24956	P20
GA26287	P23
GA26297	P34
GA26876	P60
GA26909	P60
GA26920	P8
GA26924-01	P73
GA26924-01	P75
GA26924-01	P77
GA26924-02	P73
GA26924-02	P75
GA26924-02	P77
GA26924-03	P73
GA26924-03	P75
GA26924-03	P77
GA26924-04	P73
GA26924-04	P75
GA26924-04	P77
GA26958	P12
GA27038	P28
GA3893	P105
GA4235	P94
GA4265	P42
GA4286	P85
GA4287	P85
GA4376	P46
GA4444	P23
GA4976	P100
GA4976	P102
GA5090	P48
GA5105	P48
GA5105	P52
GA5105	P94
GA5106	P52
GA5106	P53
GA5107	P37
GA5107	P52
GA5107	P94
GA5108	P52
GA5109	P52
GA5110	P52

Part No.	Page
GA5111	P52
GA5112	P52
GA5113	P52
GA5114	P49
GA5114	P94
GA5115	P94
GA5116	P52
GA5116	P94
GA5116	P94
GA5118	P48
GA5121	P46
GA5122	P46
GA5130	P58
GA5146	P53
GA5157	P48
GA5158	P48
GA5164	P50
GA5165	P50
GA5175	P56
GA5177	P56
GA5178	P56
GA5183	P56
GA5188	P58
GA5194	P104
GA5197	P42
GA5202	P53
GA5223	P94
GA5230	P92
GA5231	P92
GA5236	P92
GA5237	P92
GA5385	P80
GA5552	P71
GA5572	P71
GA5600	P82
GA5624	P52
GA5624	P94
GA5629	P52
GA5652	P96
GA5654	P28
GA5666	P96
GA5667	P96
GA5698	P20
GA5699	P20
GA5887	P85
GA5917	P100
GA5917	P102
GA6147	P83
GA6171	P10
GA6171	P12
GA6171	P12
GA6171	P12

Part No.	Page
GA6171	P91
GA6337	P94
GA6434	P12
GA6501	P104
GA6597	P12
GA6699	P80
GA6700	P80
GA6701	P80
GA6741	P22
GA6761	P39
GA6823	P80
GA6824	P80
GA6907	P22
GA6966	P88
GA7154	P37
GA7154	P52
GA7235	P47
GA7239	P86
GA7240	P86
GA7313	P94
GA7336	P53
GA7336	P94
GA7336	P104
GA7375	P100
GA7375	P102
GA7434	P46
GA7850	P82
GA7853	P82
GA7854	P82
GA7855	P82
GA7857	P82
GA7858	P82
GA7859	P82
GA7909	P42
GA8021	P82
GA8022	P82
GA8026	P82
GA8046	P82
GA8047	P80
GA8047	P82
GA8092	P37
GA8130	P68
GA8326	P24
GA8343	P18
GA8364	P24
GA8366	P24
GA8371	P23
GA8487	P39
GA8488	P39
GA8603	P25
GA8603	P88
GA8641	P25

Part No.	Page
GA8670	P42
GA8676	P39
GA8688	P86
GA8689	P86
GA8716	P37
GA8717	P37
GA8760	P28
GA8897	P68
GA8924	P68
GA8931	P109
GA9007	P42
GA9144	P82
GA9206	P80
GA9207	P80
GA9426	P42
GA9427	P42
GA9428	P41
GA9429	P41
GA9430	P92
GA9431	P92
GA9433	P88
GA9434	P88
GA9437	P88
GA9438	P42
GA9439	P42
GA9472	P91
GA9564	P88
GA9714	P16
GA9819	P88
GA9820	P88
GA9846	P48
GA9870	P48
GA9872	P39
GA9978	P82
GA9979	P82
GB0110	P18
GB0115	P24
GB0116	P24
GB0120	P18
GB0156	P41
GB0186	P6
GB0198	P96
GB0199	P96
GB0200	P96
GB0205	P85
GB0206	P86
GB0209	P86
GB0210	P86
GB0218	P48
GB0218	P85
GB0239	P12
GB0254	P12

Part No.	Page
GB0259	P53
GB0265	P4
GB0266	P4
GB0266	P34
GB0267	P4
GB0267	P34
GB0268	P12
GB0274	P4
GB0274	P34
GB0276	P10
GB0278	P14
GB0278	P24
GB0282	P12
GB0287	P49
GB0287	P50
GB0296	P88
GB0314	P6
GB0314	P32
GB0322	P88
GB0323	P88
GB0331	P14
GB0366	P6
GB0383	P28
GB0387	P28
GB0400	P88
GB0405	P88
GB0410	P18
GB0410	P18
GB0464	P28
GB0554	P60
GB0968	P35
GB1081	P20
GB1084	P20
GB1085	P20
GB1090	P82
GB1090	P82
GB1090	P82
GB1107	P20
GB1123	P20
GB1124	P20
GB1130	P20
GB1131	P20
GB1132	P20
GB1133	P20
GB1134	P20
GB1147	P20
GB1148	P20
GB1171	P20
GB1223	P6
GB1223	P32
GB1224	P6
GB1224	P6

Part No.	Page
GB1224	P32
GB1224	P32
GD0438	P56
GD0453-02	P56
GD0453-03	P58
GD0453-06	P56
GD0453-07	P56
GD0462	P56
GD0746	P60
GD0752-41	P58
GD0840	P60
GD0914-109	P49
GD0914-144	P37
GD0914-170	P50
GD0914-205	P37
GD0914-230	P50
GD0914-84	P37
GD10036	P6
GD10110	P100
GD10110	P102
GD10161	P94
GD10223	P71
GD10224	P71
GD10242	P86
GD1026	P15
GD1026	P22
GD1026	P35
GD1026	P48
GD1026	P53
GD1026	P88
GD1026	P94
GD1026	P104
GD10273	P86
GD10283	P60
GD10303	P86
GD10304	P86
GD1041	P18
GD1042	P18
GD10487	P86
GD10519	P28
GD1059L	P23
GD1059R	P23
GD1060	P23
GD1061	P24
GD1063	P24
GD1065	P15
GD1083	P18
GD1085	P12
GD10963	P22
GD10984	P22
GD10991	P10
GD10993	P4
GD10993	P34
GD11001	P4
GD1104	P86
GD11045	P37
GD11045	P49
GD11045	P50
GD11045	P104
GD11089	P80
GD11089	P83
GD1109	P12
GD11123	P102
GD11124	P102
GD1113	P6
GD1113	P32
GD1113	P42
GD1113	P88
GD1113	P88
GD1113	P88
GD1114	P32
GD1114	P42
GD1114	P86
GD1114	P92
GD1114	P96
GD11180	P104
GD11218	P35
GD11219	P22
GD11239	P14
GD11239	P24
GD11240	P24
GD11259	P4
GD11259	P34
GD11264	P32
GD11279	P16
GD11286	P18
GD11297	P24
GD11305	P22
GD11306	P8
GD1132	P28
GD1138	P92
GD11413	P14
GD11413	P24
GD11424	P23
GD11458	P46
GD11474	P83
GD11490	P46
GD11528	P18
GD11535	P39
GD11557	P88
GD11558	P88
GD11559	P39
GD11649	P32
GD11657	P39
GD11662	P39
GD11677	P25
GD11700	P104
GD11721	P37
GD11721	P100
GD11721	P102
GD11747	P16
GD11751	P68
GD11787	P18
GD11953	P91
GD11962	P15
GD11962	P22
GD11985	P65
GD11995	P68
GD1200	P96
GD1207	P96
GD1209	P96
GD1210	P96
GD12101	P66
GD12101	P67
GD12102	P63
GD12102	P64
GD12102	P65
GD1213	P96
GD1213	P96
GD12505	P64
GD12507	P63
GD12510	P66
GD12510	P67
GD12513	P68
GD1255	P50
GD1256	P50
GD12561	P16
GD12571	P52
GD12676	P88
GD12677	P88
GD12679	P88
GD12685	P88
GD13287	P88
GD13309	P91
GD13348	P82
GD1337	P100
GD13401	P46
GD1379	P96
GD1380	P96
GD14217	P6
GD14413	P53
GD14413	P104
GD14427	P53
GD14427	P105
GD14431	P52
GD14431	P105
GD14432	P53
GD14432	P105
GD14559	P86
GD1512	P114
GD1514	P100
GD1514	P102
GD1515	P100
GD1515	P102
GD1516	P100
GD1516	P102
GD1517	P100
GD1517	P102
GD1520	P100
GD15386	P58
GD15538	P53
GD15685	P104
GD15698	P18
GD15699	P20
GD16245	P4
GD16245	P34
GD1685-12	P92
GD1685-13	P92
GD1685-14	P92
GD1685-15	P92
GD1685-16	P92
GD1748	P100
GD1748	P102
GD18118	P83
GD18168	P83
GD1862	P100
GD1862	P102
GD18704	P18
GD19292	P25
GD19333	P18
GD19343	P53
GD19343	P104
GD19790	P18
GD20060	P102
GD20456	P46
GD20461	P46
GD2117	P114
GD21337	P6
GD21398	P96
GD21540	P60
GD2161	P58
GD2199	P80
GD2199	P111
GD22685	P117
GD22692	P117
GD2412	P96
GD2423	P22
GD24545	P4

Part No.	Page
GD24545	P32
GD2548-15.5	P98
GD2548-25.5	P98
GD2548-27.5	P98
GD25568	P32
GD25569	P32
GD2558	P48
GD2558	P53
GD2558	P94
GD2597	P60
GD26146	P12
GD26419	P18
GD26594	P18
GD26598	P91
GD26973	P28
GD2721	P56
GD2721	P58
GD27233	P66
GD27233	P67
GD27234	P65
GD27235	P63
GD27235	P64
GD27235	P68
GD2734-08	P104
GD28390	P4
GD29221	P42
GD29459	P32
GD2947	P22
GD29507	P14
GD29689	P66
GD29689	P67
GD2971-10	P22
GD2971-31	P8
GD2984	P114
GD2984	P114
GD30221	P61
GD30401	P65
GD30622	P53
GD30624	P53
GD30722	P61
GD30723	P61
GD30725	P8
GD30725	P28
GD31450	P52
GD31466	P91
GD3180-17	P94
GD34021-02	P20
GD34178	P46
GD34923	P85
GD35127	P44
GD35339	P44
GD35340	P44
GD35444	P8
GD35471	P32
GD35472	P32
GD35784-01	P20
GD3612	P4
GD3612	P34
GD36277	P22
GD36709	P10
GD36713	P10
GD36856	P8
GD36860	P8
GD36922	P18
GD36990	P8
GD3839	P104
GD4887-01	P52
GD5752	P48
GD5753	P48
GD5756	P48
GD5756	P53
GD5789	P47
GD5790	P47
GD5791	P47
GD5827	P47
GD5827	P52
GD5835	P53
GD5841	P46
GD5857	P47
GD5857	P52
GD5857	P94
GD5857	P104
GD5860	P48
GD5875	P42
GD5875	P58
GD5884-01	P50
GD5885-01	P50
GD5885-02	P49
GD5886	P94
GD5886	P98
GD5888	P42
GD5892	P56
GD5961	P49
GD5961	P50
GD5990	P104
GD6027	P39
GD6027	P42
GD6027	P42
GD6551	P52
GD6553	P85
GD6825-10.5	P48
GD7127	P52
GD7127	P94
GD7140	P41
GD7145	P37
GD7145	P80
GD7145	P100
GD7145	P102
GD7148	P24
GD7152	P80
GD7258	P24
GD7318	P15
GD7426	P48
GD7426	P53
GD7426	P94
GD7426	P104
GD7803	P25
GD7804	P25
GD7819	P49
GD7822	P52
GD7848	P96
GD7867	P94
GD7867	P98
GD7868	P98
GD7870	P94
GD7871	P94
GD7900	P85
GD7904-02	P86
GD7907	P86
GD7908	P85
GD7912	P86
GD7944	P39
GD7944	P48
GD7962	P85
GD8224	P86
GD8238	P85
GD8239	P86
GD8247	P85
GD8276	P86
GD8304	P80
GD8460	P12
GD8751	P82
GD8770	P82
GD8771	P82
GD8778	P20
GD8893-01	P35
GD8893-07	P44
GD9120	P12
GD9229	P37
GD9254	P25
GD9695	P32
GD9724	P28
GM0298-01	P116
GM0298-02	P116
GPR1094	P116
GR0146MPP	P115
GR0150	P60
GR0151	P60
GR0188	P85
GR0193	P56
GR0196	P6
GR0196	P22
GR0196	P32
GR0255	P41
GR0270	P46
GR0434	P46
GR0508	P100
GR0508	P102
GR0586	P82
GR0594	P82
GR0664	P18
GR0880	P105
GR0881	P105
GR0882	P105
GR0883	P105
GR0912	P37
GR0912	P48
GR0912	P52
GR0912	P53
GR0912	P94
GR0912	P104
GR0962	P56
GR1015	P100
GR1015	P102
GR1016	P100
GR1016	P102
GR1017	P100
GR1017	P102
GR1018	P100
GR1018	P102
GR1019	P100
GR1019	P102
GR1032	P71
GR1033	P71
GR1034	P71
GR1035	P71
GR1036	P71
GR1037	P63
GR1037	P64
GR1037	P65
GR1037	P66
GR1037	P67
GR1037	P71
GR1037	P73
GR1037	P73
GR1037	P73
GR1037	P75
GR1037	P75

Part No.	Page
GR1037	P75
GR1037	P77
GR1037	P77
GR1037	P77
GR1038	P71
GR1039	P71
GR1040	P71
GR1041	P71
GR1042	P71
GR1043	P71
GR1044	P71
GR1045	P71
GR1045	P71
GR1045	P77
GR1046	P71
GR1047	P71
GR1048	P71
GR1104	P107
GR1112	P107
GR1116	P107
GR1118	P107
GR1120	P107
GR1122	P104
GR1123	P107
GR1124	P107
GR1134	P107
GR1169	P68
GR1208	P80
GR1208	P80
GR1389	P107
GR1405	P37
GR1406	P37
GR1407	P37
GR1408	P37
GR1409	P37
GR1410	P37
GR1411	P37
GR1412	P37
GR1413	P37
GR1414	P83
GR1415	P83
GR1465	P77
GR1523	P68
GR1533	P109
GR1535	P109
GR1540	P109
GR1541	P109
GR1542	P109
GR1543	P107
GR1543	P109
GR1544	P109
GR1545	P109
GR1569	P18
GR1570MPP	P116
GR1574	P109
GR1708	P100
GR1708	P102
GR1762	P82
GR1763	P83
GR1795	P107
GR1797	P107
GR1799	P107
GR1801	P107
GR1802	P107
GR1804	P107
GR1805	P107
GR1806	P107
GR1808	P107
GR1842MPP	P116
GR1848	P18
GR1941	P100
GR1941	P102
GR1956	P80
GR1956	P80
GR1957	P80
GR1958	P80
GR2003	P107
GR2127MPP	P115
GR2154	P18
GR2225	P64
GR2227	P65
GR2228	P63
GR2229	P66
GR2229	P67
GR2240MPP	P116
GR2241MPP	P116
GR2334	P116

This page left blank intentionally.